GMAW Push-Pull Gun

IM599

MK091-0416
June 2000
Rev. k

OPERATOR'S MANUAL

Prince™ XL/Spool Gun

For use with Cabinet K1587-1

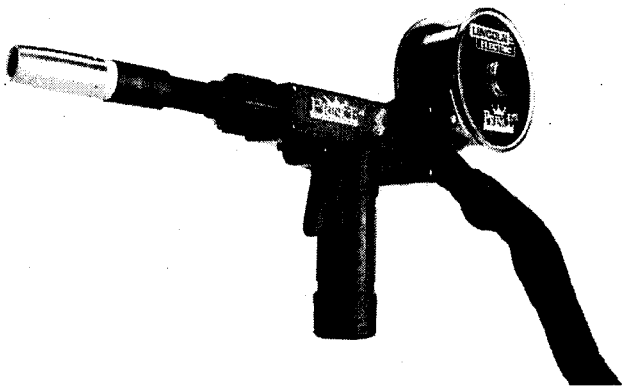

Safety Depends on You

Lincoln arc welding equipment is designed and built with safety in mind. However, your overall safety can be increased by proper installation...and thoughful operation on your part. **DO NOT INSTALL, OPERATE OR REPAIR THIS EQUIPMENT WITHOUT READING THIS MANUAL AND THE SAFETY PRECAUTIONS CONTAINED THROUGHOUT.** And, most importantly, think before you act and be careful.

CE

OPERATOR'S MANUAL

World's Leader in Welding and Cutting Products

LINCOLN ELECTRIC

Premier Manufacturer of Industrial Motors

Sales and Service through Subsidiaries and Distributors Worldwide

Cleveland, Ohio 44117-1199 U.S.A. TEL: 216.481.8100 FAX: 216.486.1751 WEB SITE: www.lincolnelectric.com

! CALIFORNIA PROPOSITION 65 WARNINGS !

Diesel engine exhaust and some of its constituents are known to the State of California to cause cancer, birth defects, and other reproductive harm.

The Above For Diesel Engines

The engine exhaust from this product contains chemicals known to the State of California to cause cancer, birth defects, or other reproductive harm.

The Above For Gasoline Engines

ARC WELDING CAN BE HAZARDOUS. PROTECT YOURSELF AND OTHERS FROM POSSIBLE SERIOUS INJURY OR DEATH. KEEP CHILDREN AWAY. PACEMAKER WEARERS SHOULD CONSULT WITH THEIR DOCTOR BEFORE OPERATING.

Read and understand the following safety highlights. For additional safety information, it is strongly recommended that you purchase a copy of "Safety in Welding & Cutting - ANSI Standard Z49.1" from the American Welding Society, P.O. Box 351040, Miami, Florida 33135 or CSA Standard W117.2-1974. A Free copy of "Arc Welding Safety" booklet E205 is available from the Lincoln Electric Company, 22801 St. Clair Avenue, Cleveland, Ohio 44117-1199.

BE SURE THAT ALL INSTALLATION, OPERATION, MAINTENANCE AND REPAIR PROCEDURES ARE PERFORMED ONLY BY QUALIFIED INDIVIDUALS.

FOR ENGINE powered equipment.

1.a. Turn the engine off before troubleshooting and maintenance work unless the maintenance work requires it to be running.

1.b. Operate engines in open, well-ventilated areas or vent the engine exhaust fumes outdoors.

1.c. Do not add the fuel near an open flame welding arc or when the engine is running. Stop the engine and allow it to cool before refueling to prevent spilled fuel from vaporizing on contact with hot engine parts and igniting. Do not spill fuel when filling tank. If fuel is spilled, wipe it up and do not start engine until fumes have been eliminated.

1.d. Keep all equipment safety guards, covers and devices in position and in good repair.Keep hands, hair, clothing and tools away from V-belts, gears, fans and all other moving parts when starting, operating or repairing equipment.

1.e. In some cases it may be necessary to remove safety guards to perform required maintenance. Remove guards only when necessary and replace them when the maintenance requiring their removal is complete. Always use the greatest care when working near moving parts.

1.f. Do not put your hands near the engine fan. Do not attempt to override the governor or idler by pushing on the throttle control rods while the engine is running.

1.g. To prevent accidentally starting gasoline engines while turning the engine or welding generator during maintenance work, disconnect the spark plug wires, distributor cap or magneto wire as appropriate.

1.h. To avoid scalding, do not remove the radiator pressure cap when the engine is hot.

ELECTRIC AND MAGNETIC FIELDS may be dangerous

2.a. Electric current flowing through any conductor causes localized Electric and Magnetic Fields (EMF). Welding current creates EMF fields around welding cables and welding machines

2.b. EMF fields may interfere with some pacemakers, and welders having a pacemaker should consult their physician before welding.

2.c. Exposure to EMF fields in welding may have other health effects which are now not known.

2.d. All welders should use the following procedures in order to minimize exposure to EMF fields from the welding circuit:

2.d.1. Route the electrode and work cables together - Secure them with tape when possible.

2.d.2. Never coil the electrode lead around your body.

2.d.3. Do not place your body between the electrode and work cables. If the electrode cable is on your right side, the work cable should also be on your right side.

2.d.4. Connect the work cable to the workpiece as close as possible to the area being welded.

2.d.5. Do not work next to welding power source.

Mar '95

ELECTRIC SHOCK can kill.

3.a. The electrode and work (or ground) circuits are electrically "hot" when the welder is on. Do not touch these "hot" parts with your bare skin or wet clothing. Wear dry, hole-free gloves to insulate hands.

3.b. Insulate yourself from work and ground using dry insulation. Make certain the insulation is large enough to cover your full area of physical contact with work and ground.

In addition to the normal safety precautions, if welding must be performed under electrically hazardous conditions (in damp locations or while wearing wet clothing; on metal structures such as floors, gratings or scaffolds; when in cramped positions such as sitting, kneeling or lying, if there is a high risk of unavoidable or accidental contact with the workpiece or ground) use the following equipment:

- **Semiautomatic DC Constant Voltage (Wire) Welder.**
- **DC Manual (Stick) Welder.**
- **AC Welder with Reduced Voltage Control.**

3.c. In semiautomatic or automatic wire welding, the electrode, electrode reel, welding head, nozzle or semiautomatic welding gun are also electrically "hot".

3.d. Always be sure the work cable makes a good electrical connection with the metal being welded. The connection should be as close as possible to the area being welded.

3.e. Ground the work or metal to be welded to a good electrical (earth) ground.

3.f. Maintain the electrode holder, work clamp, welding cable and welding machine in good, safe operating condition. Replace damaged insulation.

3.g. Never dip the electrode in water for cooling.

3.h. Never simultaneously touch electrically "hot" parts of electrode holders connected to two welders because voltage between the two can be the total of the open circuit voltage of both welders.

3.i. When working above floor level, use a safety belt to protect yourself from a fall should you get a shock.

3.j. Also see Items 6.c. and 8.

ARC RAYS can burn.

4.a. Use a shield with the proper filter and cover plates to protect your eyes from sparks and the rays of the arc when welding or observing open arc welding. Headshield and filter lens should conform to ANSI Z87. I standards.

4.b. Use suitable clothing made from durable flame-resistant material to protect your skin and that of your helpers from the arc rays.

4.c. Protect other nearby personnel with suitable, non-flammable screening and/or warn them not to watch the arc nor expose themselves to the arc rays or to hot spatter or metal.

FUMES AND GASES can be dangerous.

5.a. Welding may produce fumes and gases hazardous to health. Avoid breathing these fumes and gases. When welding, keep your head out of the fume. Use enough ventilation and/or exhaust at the arc to keep fumes and gases away from the breathing zone. **When welding with electrodes which require special ventilation such as stainless or hard facing (see instructions on container or MSDS) or on lead or cadmium plated steel and other metals or coatings which produce highly toxic fumes, keep exposure as low as possible and below Threshold Limit Values (TLV) using local exhaust or mechanical ventilation. In confined spaces or in some circumstances, outdoors, a respirator may be required. Additional precautions are also required when welding on galvanized steel.**

5.b. Do not weld in locations near chlorinated hydrocarbon vapors coming from degreasing, cleaning or spraying operations. The heat and rays of the arc can react with solvent vapors to form phosgene, a highly toxic gas, and other irritating products.

5.c. Shielding gases used for arc welding can displace air and cause injury or death. Always use enough ventilation, especially in confined areas, to insure breathing air is safe.

5.d. Read and understand the manufacturer's instructions for this equipment and the consumables to be used, including the material safety data sheet (MSDS) and follow your employer's safety practices. MSDS forms are available from your welding distributor or from the manufacturer.

5.e. Also see item 1.b.

Mar '95

WELDING SPARKS can cause fire or explosion.

6.a. Remove fire hazards from the welding area. If this is not possible, cover them to prevent the welding sparks from starting a fire. Remember that welding sparks and hot materials from welding can easily go through small cracks and openings to adjacent areas. Avoid welding near hydraulic lines. Have a fire extinguisher readily available.

6.b. Where compressed gases are to be used at the job site, special precautions should be used to prevent hazardous situations. Refer to "Safety in Welding and Cutting" (ANSI Standard Z49.1) and the operating information for the equipment being used.

6.c. When not welding, make certain no part of the electrode circuit is touching the work or ground. Accidental contact can cause overheating and create a fire hazard.

6.d. Do not heat, cut or weld tanks, drums or containers until the proper steps have been taken to insure that such procedures will not cause flammable or toxic vapors from substances inside. They can cause an explosion even though they have been "cleaned". For information, purchase "Recommended Safe Practices for the Preparation for Welding and Cutting of Containers and Piping That Have Held Hazardous Substances", AWS F4.1 from the American Welding Society (see address above).

6.e. Vent hollow castings or containers before heating, cutting or welding. They may explode.

6.f. Sparks and spatter are thrown from the welding arc. Wear oil free protective garments such as leather gloves, heavy shirt, cuffless trousers, high shoes and a cap over your hair. Wear ear plugs when welding out of position or in confined places. Always wear safety glasses with side shields when in a welding area.

6.g. Connect the work cable to the work as close to the welding area as practical. Work cables connected to the building framework or other locations away from the welding area increase the possibility of the welding current passing through lifting chains, crane cables or other alternate circuits. This can create fire hazards or overheat lifting chains or cables until they fail.

6.h. Also see item 1.c.

CYLINDER may explode if damaged.

7.a. Use only compressed gas cylinders containing the correct shielding gas for the process used and properly operating regulators designed for the gas and pressure used. All hoses, fittings, etc. should be suitable for the application and maintained in good condition.

7.b. Always keep cylinders in an upright position securely chained to an undercarriage or fixed support.

7.c. Cylinders should be located:

- Away from areas where they may be struck or subjected to physical damage.
- A safe distance from arc welding or cutting operations and any other source of heat, sparks, or flame.

7.d. Never allow the electrode, electrode holder or any other electrically "hot" parts to touch a cylinder.

7.e. Keep your head and face away from the cylinder valve outlet when opening the cylinder valve.

7.f. Valve protection caps should always be in place and hand tight except when the cylinder is in use or connected for use.

7.g. Read and follow the instructions on compressed gas cylinders, associated equipment, and CGA publication P-1, "Precautions for Safe Handling of Compressed Gases in Cylinders," available from the Compressed Gas Association 1235 Jefferson Davis Highway, Arlington, VA 22202.

FOR ELECTRICALLY powered equipment.

8.a. Turn off input power using the disconnect switch at the fuse box before working on the equipment.

8.b. Install equipment in accordance with the U.S. National Electrical Code, all local codes and the manufacturer's recommendations.

8.c. Ground the equipment in accordance with the U.S. National Electrical Code and the manufacturer's recommendations.

Mar '95

PRÉCAUTIONS DE SÛRETÉ

Pour votre propre protection lire et observer toutes les instructions et les précautions de sûreté specifiques qui parraissent dans ce manuel aussi bien que les précautions de sûreté générales suivantes:

Sûreté Pour Soudage A L'Arc

1. Protegez-vous contre la secousse électrique:

   a. Les circuits à l'électrode et à la pièce sont sous tension quand la machine à souder est en marche. Eviter toujours tout contact entre les parties sous tension et la peau nue ou les vêtements mouillés. Porter des gants secs et sans trous pour isoler les mains.
   b. Faire trés attention de bien s'isoler de la masse quand on soude dans des endroits humides, ou sur un plancher metallique ou des grilles metalliques, principalement dans les positions assis ou couché pour lesquelles une grande partie du corps peut être en contact avec la masse.
   c. Maintenir le porte-électrode, la pince de masse, le câble de soudage et la machine à souder en bon et sûr état defonctionnement.
   d. Ne jamais plonger le porte-électrode dans l'eau pour le refroidir.
   e. Ne jamais toucher simultanément les parties sous tension des porte-électrodes connectés à deux machines à souder parce que la tension entre les deux pinces peut être le total de la tension à vide des deux machines.
   f. Si on utilise la machine à souder comme une source de courant pour soudage semi-automatique, ces precautions pour le porte-électrode s'applicuent aussi au pistolet de soudage.

2. Dans le cas de travail au dessus du niveau du sol, se protéger contre les chutes dans le cas ou on recoit un choc. Ne jamais enrouler le câble-électrode autour de n'importe quelle partie du corps.

3. Un coup d'arc peut être plus sévère qu'un coup de soleil, donc:

   a. Utiliser un bon masque avec un verre filtrant approprié ainsi qu'un verre blanc afin de se protéger les yeux du rayonnement de l'arc et des projections quand on soude ou quand on regarde l'arc.
   b. Porter des vêtements convenables afin de protéger la peau de soudeur et des aides contre le rayonnement de l'arc.
   c. Protéger l'autre personnel travaillant à proximité au soudage à l'aide d'écrans appropriés et non-inflammables.

4. Des gouttes de laitier en fusion sont émises de l'arc de soudage. Se protéger avec des vêtements de protection libres de l'huile, tels que les gants en cuir, chemise épaisse, pantalons sans revers, et chaussures montantes.

5. Toujours porter des lunettes de sécurité dans la zone de soudage. Utiliser des lunettes avec écrans lateraux dans les zones où l'on pique le laitier.

6. Eloigner les matériaux inflammables ou les recouvrir afin de prevenir tout risque d'incendie dû aux étincelles.

7. Quand on ne soude pas, poser la pince à une endroit isolé de la masse. Un court-circuit accidental peut provoquer un échauffement et un risque d'incendie.

8. S'assurer que la masse est connectée le plus près possible de la zone de travail qu'il est pratique de le faire. Si on place la masse sur la charpente de la construction ou d'autres endroits éloignés de la zone de travail, on augmente le risque de voir passer le courant de soudage par les chaines de levage, câbles de grue, ou autres circuits. Cela peut provoquer des risques d'incendie ou d'echauffement des chaines et des câbles jusqu'à ce qu'ils se rompent.

9. Assurer une ventilation suffisante dans la zone de soudage. Ceci est particuliérement important pour le soudage de tôles galvanisées plombées, ou cadmiées ou tout autre métal qui produit des fumeés toxiques.

10. Ne pas souder en présence de vapeurs de chlore provenant d'opérations de dégraissage, nettoyage ou pistolage. La chaleur ou les rayons de l'arc peuvent réagir avec les vapeurs du solvant pour produire du phosgène (gas fortement toxique) ou autres produits irritants.

11. Pour obtenir de plus amples renseignements sur la sûreté, voir le code "Code for safety in welding and cutting" CSA Standard W 117.2-1974.

PRÉCAUTIONS DE SÛRETÉ POUR LES MACHINES À SOUDER À TRANSFORMATEUR ET À REDRESSEUR

1. Relier à la terre le chassis du poste conformement au code de l'électricité et aux recommendations du fabricant. Le dispositif de montage ou la piece à souder doit être branché à une bonne mise à la terre.

2. Autant que possible, l'installation et l'entretien du poste seront effectués par un électricien qualifié.

3. Avant de faires des travaux à l'interieur de poste, la debrancher à l'interrupteur à la boite de fusibles.

4. Garder tous les couvercles et dispositifs de sûreté à leur place.

Mar. '93

Thank You — for selecting a **QUALITY** product by MK / Lincoln Electric. We want you to take pride in operating this MK Products Inc. / Lincoln Electric Company product ••• as much pride as we have in bringing this product to you!

Please Examine Carton and Equipment For Damage Immediately

When this equipment is shipped, title passes to the purchaser upon receipt by the carrier. Consequently, Claims for material damaged in shipment must be made by the purchaser against the transportation company at the time the shipment is received.

Please record your equipment identification information below for future reference. This information can be found on your machine nameplate.

Model Name and Sales SpecNumber (K-xxx) _____

Date of Purchase _____

Whenever you request replacement parts for or information on this equipment always supply the information you have recorded above.

Read this Operators Manual completely before attempting to use this equipment. There are some important topics covered in the manual about how this system works and how it is different than wire feeders you may be use to. Save this manual and keep it handy for quick reference. Pay particular attention to the safety instructions we have provided for your protection. The level of seriousness to be applied to each is explained below:

⚠ WARNING

This statement appears where the information **must** be followed **exactly** to avoid **serious personal injury** or **loss of life.**

⚠ CAUTION

This statement appears where the information **must** be followed to avoid **minor personal injury** or **damage to this equipment.**

The Wire Feeder - Gun section of the welding package is a push-pull system, which means that there is a motor in the wire feeder as well as the welding gun. These must both be set-up properly to achieve maximum benefit from the welding package.

The Wire Feeder – Gun section of the welding package is fully warranted by MK Products and Lincoln Electric and can be serviced at the MK Products Service locations listed inside the back cover of this manual.

Spare parts may be purchased from either company if so indicated by a part number in the respective company part number column in the parts listings.

THIS PAGE INTENTIONALLY BLANK

Table of Contents

THIS PAGE INTENTIONALLY BLANK

Section 1

SPECIFICATIONS

PRINCE™XL TORCH

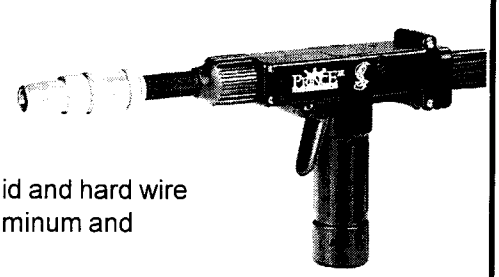

Wire Capacity
- .023" -.045" (0.6 - 1.2mm) solid and hard wire
- .030" - 1/16" (0.8 - 1.6mm) aluminum and cored wire

Wire Speed
- 750 ipm (19.0 mpm) max.

Duty Cycle - Prince™ XL
- **150 Amps/25 Volts** *Air cooled standard*
- **200 Amps/25 Volts** *Air cooled using optional Kool Cup Adaptor H.D. (P/N 003-1487), #10 Gas Cup for Kool Cup Adapter (P/N 621-0386) and Cup Retaining Nut (P/N 449-0193)*
- **300 Amps/25 Volts** *Water cooled standard using W/C Cup Adaptor (P/N 621-0101), #8 A/C Gas Cup (P/N 621-0159) and Cup Retaining Nut (P/N 449-0193)*
- **400 Amps/25 Volts** *Water cooled using optional W/C Cup (P/N 621-0065)*

All above Duty Cycle ratings are with Argon Gas

Torch weight (less leads)
- Air cooled - 36.4 oz. (1.02 kilogram)
- Water cooled - 38.4 oz (1.08 kilogram)

PRINCE™XL SPOOL GUN

Wire Capacity
- .023" - .045" (0.6 - 1.2mm) solid and hard wire
- .030" - 1/16" (0.8 - 1.6mm) aluminum and cored wire

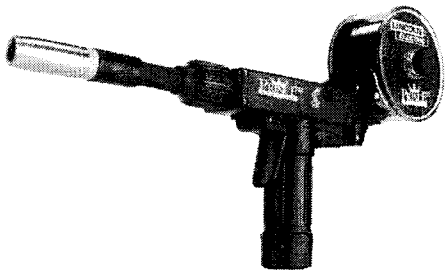

Wire Speed *
- 750 ipm (19.0 mpm) max.

Spool Size
- 4 inches (101.6mm)

Duty Cycle
- Air cooled standard 150 amps/25 volts
- Air cooled optional 200 amps/25 volts using Kool Cup Adapter (P/N 003-1487), #10 Gas Cup for Kool Cup Adapter (P/N 621-0386) and Cup Retaining Nut (P/N 449-0193)

All above Duty Cycle ratings are with Argon Gas

Torch weight (less wire & leads)
- Air cooled - 46.5 oz (1.3 kilogram)

** Maximum ipm varies depending on input voltage, wire size and the control box used.*

Section 2

CONTACT TIPS - AIR COOLED BARREL ASSY.

Spray arc tip 

Short arc tip 

Contact Tips for Prince XL Air Cooled Torch					
WIRE SIZE	TIP I.D. *	ARC TYPE	LENGTH	LE P/N	MK P/N
.023" (0.6mm)	.030" (0.8mm)	Spray Arc	1-1/2" (38mm)	----	621-0057
	.030" (0.8mm)	Short Arc	1-3/4" (44mm)	----	621-0328
.030" (0.8mm)	.036" (0.9mm)	Spray Arc	1-1/2" (38mm)	----	621-0325
	.036" (0.9mm)	Short Arc	1-3/4" (44mm)	----	621-0326
.030" (0.8mm) or .035" (0.9mm)	.040" (1.0mm)	Spray Arc	1-1/2" (38mm)	S23978-29	621-0076
	.040" (1.0mm)	Short Arc	1-3/4" (44mm)	----	621-0077
.035" (0.9mm)	.044" (1.1mm)	Spray Arc	1-1/2" (38mm)	S23978-1	621-0001
	.044" (1.1mm)	Short Arc	1-3/4" (44mm)	----	621-0002
.045" (1.2mm)	.053" (1.3mm)	Spray Arc	1-1/2" (38mm)	----	621-0327
.045" (1.2mm) or .052" (1.3mm)	.060" (1.5mm)	Spray Arc	1-1/2" (38mm)	S23978-2*	621-0003
	.060" (1.5mm)	Short Arc	1-3/4" (44mm)	----	621-0286
1/16" (1.6mm)	.075" (1.9mm)	Spray Arc	1-1/2" (38mm)	S23978-3	621-0075
1/16" (1.6mm)	.085" (2.1mm)	Spray Arc	1-1/2" (38mm)	----	621-0153
	.085" (2.1mm)	Short Arc	1-3/4" (44mm)	----	621-0154

* Standard - Furnished with torch.
All tips stamped with tip I.D.

contact.tbl

NOTE: As a rule of thumb, use the smaller I.D. tip for steel, stainless steel and the 5000 series aluminum. Softer alloys such as the 1000 and 4000 series aluminum require more clearance and, therefore, use a larger I.D. tip.

Section 3

GAS CUPS - AIR COOLED BARREL ASSY.

Gas Cups for Prince XL Air Cooled Torch			
SIZE	I.D.	LE P/N	MK P/N
5	1/4" (6.4mm)	----	621-0079
6	3/8" (9.5mm)	----	001-0137
8	1/2" (12.7mm)	S23978-4*	001-0138
10	5/8" (15.8mm)	----	001-0139

*Standard - Furnished with torch

Section 4

CONTACT TIPS - WATER COOLED BARREL ASSY.

Contact Tips for PrinceXL Water Cooled Torch					
Wire size	Tip I.D.	Arc	Tip Length	LE P/N	MK P/N
.030" / .8mm	.040" / 1.0mm	Spray	1-5/8" / 41.3mm	S23978-30	621-0158
		Short	1-7/8" / 47.6mm	-----	621-0165
.035" / .9mm	.044" / 1.0mm	Spray	1-5/8" / 41.3mm	S23978-9	621-0157
		Short	1-7/8" / 47.6mm	----	621-0166
.045" / 1.2mm	.053" / 1.35mm	Spray	1-5/8" / 41.3mm	----	621-0161
		Short	1-7/8" / 47.6mm	----	621-0167
.052" / 1.4mm	.060" / 1.5mm	Spray	1-5/8" / 41.3mm	S23978-10	621-0162*
		Short	1-7/8" / 47.6mm	----	621-0168
.063" / 1.6mm	.075" / 1.9mm	Spray	1-5/8" / 41.3mm	S23978-11	621-0163
		Short	1-7/8" / 47.6mm	----	621-0169
.063" / 1.6mm	.085" / 2.16mm	Spray	1-5/8" / 41.3mm	----	621-0164
.093" / 2.3 mm	.113" / 2.8 mm	Spray	1-5/8" / 41.3mm	----	621-0215

To remove contact tip when using fulll water cooled gas cup (P/N 621-0065) the contact tip removal tool (P/N 931-0002) must be used.

* Standard - furnished with torch

tips.tbl

Section 5

SPRING LOADED CONTACT TIPS

Water Cooled Barrel Assy

Spring Loaded Contact Tips for Prince XL Water Cooled Torch		
MK P/N	Tip I.D.	Tip Length
621-0202	0.044" / 1.1 mm	1-5/8" / 41.3 mm lg
621-0203	0.053" / 1.4 mm	1-5/8" / 41.3 mm lg
621-0204	0.060" / 1.5 mm	1-5/8" / 41.3 mm lg
621-0205	0.075" / 1.9 mm	1-5/8" / 41.3 mm lg

Note: To remove contact tip when using full water cooled gas cup (P/N 621-0065) the contact tip removal tool (P/N 931-0002) must be used.

spgld_ct.tbl

Section 6

GAS CUPS - WATER COOLED BARREL ASSY.

Water Cooled Cup for Prince XL Water Cooled Torch				
Cup Size	Cup I.D.	Cup Length	LE P/N	MK P/N
No. 10	5/8" (15.9mm)	3" (76.2mm)	S23978-19	621-0065
Air Cooled Cups for Prince XL Water Cooled Torch				
Cup Size	Cup I.D.	Cup Length	LE P/N	MK P/N
No. 6	3/8" (9.5mm)	1.43" (36.5mm)		621-0170
No.8	1/2" (12.7mm)	1.43" (36.5mm)	S23978-12	621-0159*
No. 10	5/8" (15.9mm)	1.43" (36.5mm)		621-0160

To use air cooled gas cups, you must order a cup retaining nut (MK P/N 449-0193) and a water cooled gas adaptor (MK P/N 621-0101*)*

**Standard - supplied with torch*

cups.tbl

Section 7

TORCH BARREL LINERS

Prince XL Torch Barrel Liners					
Barrel P/N	Description	Wire Type	Wire Size	LE P/N	MK P/N
003-1980	Straight Air Cooled	All Wires	.030" - .063" (.8-1.6mm)	S23978-15*	615-0537
003-1980	Straight Air Cooled	Optional All Wires	.030" - .035" (.8-.9mm)	----	615-0544
003-1973	Straight Water Cooled	All Wires	.030" - .063" (.8-1.6mm)	S23978-16*	615-0323
003-1973	Straight Water Cooled	Optional All Wires	.030" - .035" (.8-.9mm)	-----	615-0545
003-1986	Curved Air Cooled	All Wires	.030" - .063" (.8-1.6mm)	S23978-26*	615-0539
003-1986	Curved Air Cooled	Optional All Wires	.030" - .035" (.8-.9mm)	----	615-0546
003-1986	Curved Air Cooled	Steel Wire Only	.030" - .063" (.8-1.6mm)	----	615-0547
003-1987	Curved Water Cooled	All Wires	.030" - .063" (.8-1.6mm)	----	615-0539*
003-1987	Curved Water Cooled	Optional All Wires	.030" - .035" (.8-.9mm)	----	615-0546
003-1987	Curved Water Cooled	Steel Wire Only	.030" - .045" (.8-1.2mm)	----	615-0547

barl-lnr.tbl

Bulk teflon liner material for .030 - .063" (.8-1.6mm) is P/N 615-0178
Bulk teflon liner material for .030 - .035" (.8-.9mm) is P/N 615-0177

*Standard - furnished with torch

NOTE: P/N 615-0547 is a spiral steel liner. All other liners are white teflon.

Sections 8

Barrel Assemblies

ALL BARRELS RATED AT 100% DUTY CYCLE

150 Amps, Air Cooled

200 Amps, Air Cooled, with Kool Cup Adapter

300 Amps, Water Cooled

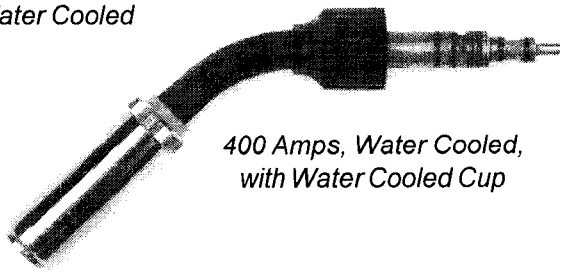

400 Amps, Water Cooled, with Water Cooled Cup

Section 9

KOOL CUP ADAPTOR and CUPS

Note : These parts are used on the air cooled straight or curved barrel assemblies to increase the capacity from 150 amps to 200 amps @ 100%

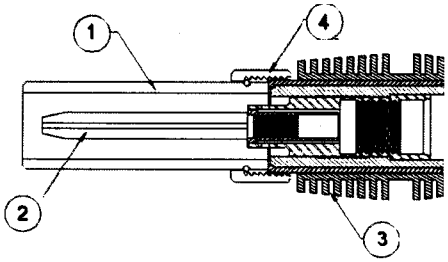

Kool Cup Adapter Heavy Duty			
Item No.	LE P/N	MK P/N	Description
1	S23978-17	621-0388	#8 Gas Cup for Kool Cup Adapter
1	----	621-0386	#10 Gas Cup for Kool Cup Adapter
2	----	see page 8	Use standard Prince tips
3	S23978-18	003-1487	Kool Cup adaptor H.D.
4	S23978-14	449-0193	Nut Cup retainer

Section 10

GAS CUP and CONTACT TIPS - 48°

Note : Must be used with Kool Cup Adaptor H.D. and Cup Retaining nut with straight Air Cooled Barrel Assemblies.

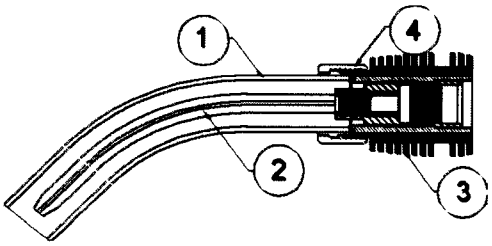

48 Degree PrinceXL Air Cooled Torch Cup and Tips Must be used with Kool Cup Adapter H.D. and Cup Retaining Nut				
LE P/N	MK P/N	Item #	Description	Wire Size
S23978-18	003-1487	3	Kool Cup Adapter H.D.	N/A
S23978-14	449-0193	4	Cup Retaining Nut	N/A
---	621-0375	1	48 Degree Curved Gas Cup	N/A
---	621-0387	2	48 Degree Tip .040 ID	.023"
----	621-0381	2	48 Degree Tip .045 ID	.030"
----	621-0382	2	48 Degree Tip .052 ID	.035"
----	621-0383	2	48 Degree Tip .060 ID	.045"
----	621-0384	2	48 Degree Tip .075 ID	3/64" - 1/16"
----	621-0385	2	48 Degree Tip .085 ID	1/16"

Section 11 OPTIONAL KITS

Insulated Knurled Drive Roll Kit ..... (MK P/N) 005-0118
For .030" through 1/16" (0.8 - 1.6mm) dia. wire. Includes insulated drive roll P/N 511-0068 and idler roll assy. P/N 511-0074.

Insulated Groove Drive Roll Kit ..... (MK P/N) 005-0640
For .030" (0.8mm) dia. aluminum wire.
Includes and insulated drive roll P/N 511-0150 and idler roll assy. P/N 003-2097.

Insulated Groove Drive Roll Kit ..... (LE P/N) KP1594-035
..... (MK P/N) 005-0641)
For .035" (0.9mm) dia. aluminum wire.
Includes insulated drive roll P/N 511-0151 and idler roll assy. P/N 003-2097.

Insulated Groove Drive Roll Kit ..... (MK P/N) 005-0642
For .040" (1.0mm)dia. aluminum wire.
Includes insulated drive roll P/N 511-0152 and idler roll assy. P/N 003-2097.

Insulated Groove Drive Roll Kit ..... (LE P/N) KP1594-3/64
..... (MK P/N) 005-0643
For .045" (1.2mm) dia. aluminum wire.
Includes insulated drive roll P/N 511-0153 and idler roll assy. P/N 003-2097.

Insulated Groove Drive Roll Kit ..... (LE P/N) KP1594-1/16
..... (MK P/N) 005-0644
For .062" (1.6mm) dia. aluminum wire.
Includes insulated drive roll P/N 511-0154 and idler roll assy. P/N 003-2097.

NOTE: Insulated drive roll kits are used to prevent preheating of the wire which may soften it and clog the liner. This picking up of current at the drive rolls rather than at the contact tip is usually not a problem usless using too large of a contact tip or excessively oxidized aluminum wire.

Prince™XL Handle Kit ..... (MK P/N) 005-0633
Includes left and right handle with door, trigger and pin,and all handle screws.

Spool Adaptor Kit ..... (MK P/N) 005-0632
Includes left and right handle with door, trigger and pin,and all handle screws. Used to change a standard 212-xxx or 213-xxx series Prince™XL torch into a Spool Gun.

7 Pin "W" Clocked Adaptor Kit ..... (MK P/N) 005-0162
Used to update a 150-001, 002, 150-101, 102 and 150-201,202 (plastic door models MK3A and MK3A PS) Cobramatic cabinets to allow the use of the Prince™XL and other "W" clocked torches.

Section 12 OPTIONAL 12" and 18" Water Cooled Straight and Curved Barrel Assemblies

12" Straight Water Cooled Barrel Assembly 003-2085

12" Curved Water Cooled Barrel Assembly 003-2086

18" Straight Water Cooled Barrel Assembly 003-2087

18" Curved Water Cooled Barrel Assembly 003-2088

Section 13

OPTIONAL ACCESSORIES

Standard Conduit with additional protective cover
- 15 ft./4.5m ..... (MK) 001-0774
- 25 ft./7.6m ..... (MK) 001-0775
- 35 ft./10.5m ..... (MK) 001-1278
- 50 ft./15.0m ..... (MK) 001-0777

Flat Spiral Steel Conduit for steel and cored wire
- 15 ft./4.5m ..... (MK) 615-0208
- 25 ft./7.6m ..... (MK) 615-0216
- 50 ft./15.0m ..... (MK) 615-0218

*Kool Cup Adapter H.D. ..... (LE) S23978-18
..... (MK) 003-1487

*Cup Retaining Nut ..... (LE) S23978-14
..... (MK) 449-0193

*#10 Gas Cup for Kool Cup Adapter ..... (MK) 621-0386

#8 Gas Cup for Kool Cup Adapter ..... (LE) S23978-17
..... (MK) 621-0388

25' 7 Pin Amphenol Extension Cable ..... (MK) 843-0352
Used to extend the spool gun. Two cables may be joined together for 50' extension. **Power & gas cables not included.**

Snake skin zipper cover
- 12' cover fits 15' lead ..... (MK) 931-0110
- 22' cover fits 25' lead ..... (MK) 931-0122
- 50' leads use 2 of 931-0122

*All three items are needed to make Prince™XL air cooled torch 200 amps/25 volts 100% duty cycle.

Section 14

MAINTENANCE TOOLS

MAINTENANCE TOOLS		
TOOL	LE P/N	MK P/N
Gas Valve Removal Tool	----	931-0584
Contact Tip Removal Tool	S23978-21	931-0002

Section 15 INTERCONNECTIONS

PRINCE™XL TORCH TO COBRAMATIC I CABINET (150-003, 150-203, K1587-1)

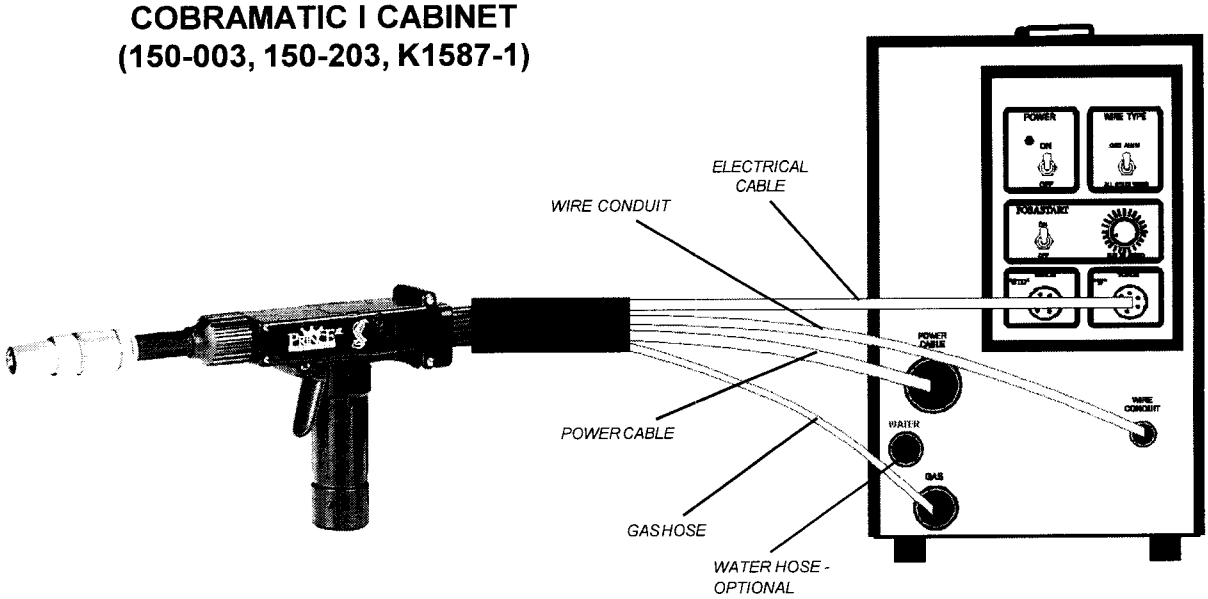

PRINCE™XL SPOOL GUN TO WC-1 WELD CONTROL BOX

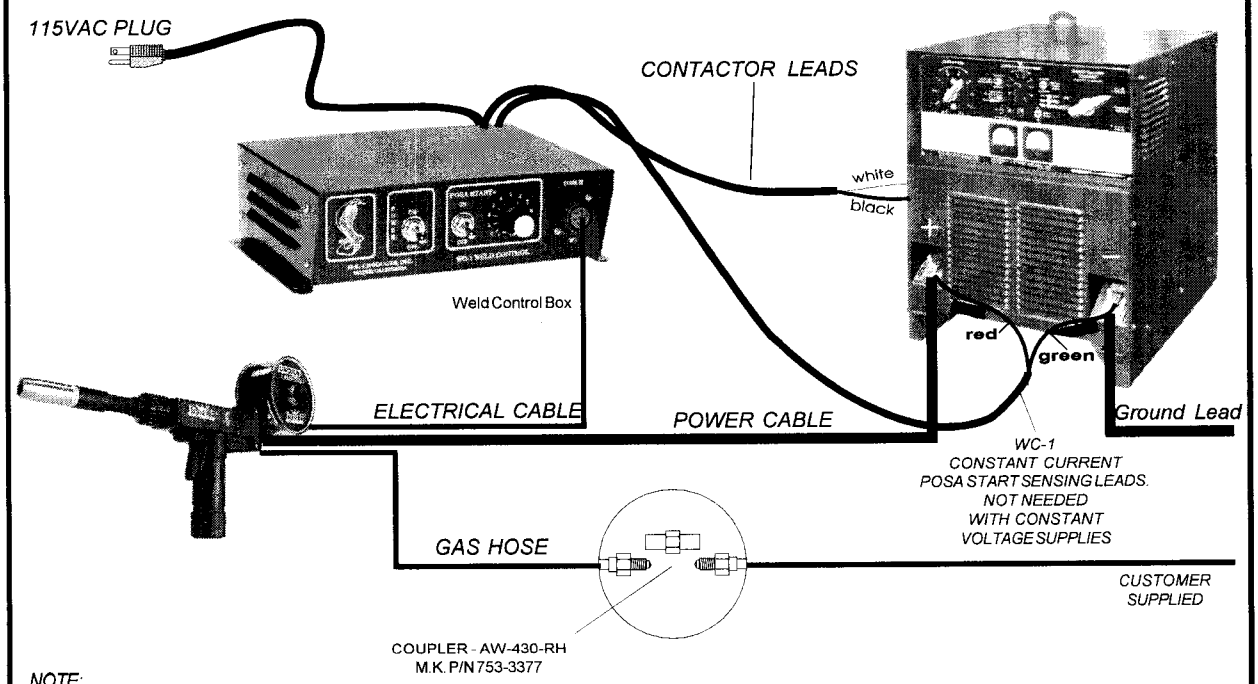

NOTE:
The Posa Start feature permits the WC-1 to be used in combination with any Constant Current DC power source with an open circuit voltage in excess of 55 volts.

Section 16 OPERATION

16.1 GENERAL

The Prince™XL torch was specifically designed to operate as both a push-pull gun and spool gun. The 24 volt DC torch motor is controlled by a 3-3/4 turn potentiometer recessed in the pistol grip. The torch trigger is so designed that when it is partially depressed, gas flow starts via the valve located in the torch body - prior to ignition of the arc. When the trigger is partially released after welding (extinguishing the arc), gas flow continues until the trigger is fully released. Built-in pre and post gas flow. The gas cups and contact tips used on the Prince™XL air cooled barrel are the same as those used on the Cobra Gooseneck. The drive and idler rolls are also the same as on the Cobra Gooseneck. The gas cups and contact tips used on the Prince™XL water cooled barrel are the same as those used on the King Cobra torch. The modular design allows parts to be replaced in sub assemblies for minimum spare parts inventory and less down time.

16.2 BARRELS

16.2.1 Air Cooled

The Prince™XL air cooled systems (K1591 series) come standard with a straight barrel. An optional curved air cooled barrel assembly is also available as a spare part. The end of the air cooled barrels have an adapter that is easily replaced if the cup threads become damaged. The adapter is threaded onto the barrel. The barrel assembly locks to the Prince™XL body using the patented EZ Lock™ system.

16.2.2 Water Cooled

The Prince™XL water cooled systems (K1592 series) come standard with a straight water cooled barrel assembly. An optional curved water cooled barrel assembly is also available as a spare part.

16.2.3 Barrel Removal and installation

To remove a barrel assembly, loosen the patented EZ Lock™ Taper lock nut assy MK P/N 003-2572 (see page 22, item 1) 3/4 to 1 turn. This will push barrel away from the body far enough so that it may be pulled out of the body.

To replace a barrel assembly, take care not to damage the "O" rings when inserting into the body. Open the drive and idler roll door and seat the barrel assembly until the inlet guide is almost touching the drive and idler roll and the rear face of the barrel is flush with the aluminum body block (see diagram). Tighten taper lock nut assembly firmly so that barrel cannot rotate.

16.2.4 Barrel Rotation

To rotate a barrel assembly, loosen the patented EZ Lock™ Taper lock nut assembly no more than 1 turn. Rotate barrel to the position of your choice and retighten taper lock nut assembly firmly so that the barrel cannot rotate.

WARNING: Do not attempt to weld without the barrel being tightly secured in the torch body, or damage to the barrel or body may result.

16.3 POTENTIOMETER

The pot is located in the bottom of the pistol grip and provides 3-3/4 turns of rotation and up to 750 ipm.

The pot is mounted to one side of a PC board and is held in place by a support plate; both of which have slots that locate and secure the pot in the handles. The other side of the PC board houses the motor connectors and ribbon cable. Locking disks behind the pot knob provides a stop at the minimum and maximum pot settings.

16.4 MICRO SWITCH

The micro switch assembly (MK P/N 003-0568) consists of the micro switch, leads, and connector. The assembly is secured to the torch block with two(2) screws. An insulator between the torch block and micro switch prevents accidential shorting of the switch leads. The leads are laid in the channel under the motor and held in place with electrical tape.

16.5 LEAD ASSEMBLIES

16.5.1 POWER CABLE - Air Cooled

A #2 AWG power cable is used on the Prince™XL air cooled torch. The torch end is threaded into the torch body. The power cable fitting connects to the Power Block
(MK P/N 003-1674) when using a Cobramatic® wire feed cabinet. When the Prince™XL is purchased as a Spool Gun, the power cable comes standard with a lug connector.

16.5.2 POWER CABLE - Water Cooled

Prince™XL water cooled torch utilizes a power/water cable with a #4AWG cable inside a 5/8" (16MM) diameter hose. When water is used with this cable and the #10 water cooled gas cup is used, the system is rated at 400 amps 100% duty cycle. If water is <u>not</u> used with this cable, the system is rated at 100 amps 50% duty cycle.

16.5.3 CONDUIT

The Prince™XL Torch comes standard with a poly lined conduit, for running aluminum wire. The longer fitting with a shallow groove is used on the torch end. A set screw located on top of the torch handle secures the conduit in place. A small spool liner (MK P/N 003-0198) is used on the spool gun and held in place by the same set screw.

16.5.4 GAS HOSE

The gas hose is secured over the barbed gas fitting with a tie wrap. The cabinet end of the gas hose uses our standard gas fitting (1/8" - 27 nps), whereas the spool gun uses a 5/8" - 18 IAA RH male gas fitting.

16.5.5 WATER HOSE

The water hose (if so equiped) is secured over the barbed water fitting with a tie wrap.

16.5.6 ELECTRIC CABLE

A seven conductor control cable is used on the Prince™XL Torch. The torch end of the control cable is secured to the torch with a boot clamp and plugged into the pot assembly and micro switch connectors. Slack is left in the electric cable as it exits the back of the torch to prevent cable breakage. The cabinet end has a seven pin "W" clocked amphenol connector. See page 22 for torch electrical connections.

16.6 DRIVE AND IDLER ROLLS

16.6.1 GENERAL

The Prince™XL torch comes standard with knurled drive rolls which will handle wire diameters from .023 - 1/16 inch. Optional grooved drive rolls are also available for feeding aluminum wire if desired (see page 12).

Drive roll tension is accomplished by means of a pressure adjusting allen screw located on the left hand side of the torch. Proper tension is achieved when wire does not slip if a small amount of pressure is added to the wire as it exits the tip.

NOTE: Over-tightening of the drive rolls will cause excessive knurling and/or deformation of the wire.

16.6.2 DRIVE ROLL INSTALLATION & REMOVAL

Rotate drive roll by jogging drive motor with trigger switch or with finger tips until slots line up with door.

Hold the drive roll with 3/8" open-end wrench.

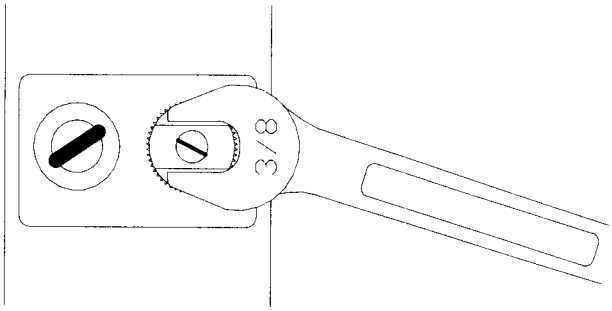

Insert a slot type screwdriver into the slot on motor shaft, and turn screwdriver CCW (left hand thread).

Install new drive roll on motor shaft using left hand thread. Drive roll will self-tighten when feeding wire.

16.6.3 IDLER ROLL INSTALLATION & REMOVAL

Using a slot type screwdriver, loosen idler screw, taking care not to lose lock washer under idler roll.

Insert new idler roll and lock washer onto screw, insuring that idler groove is toward top and lock washer is beneath.

Tighten.

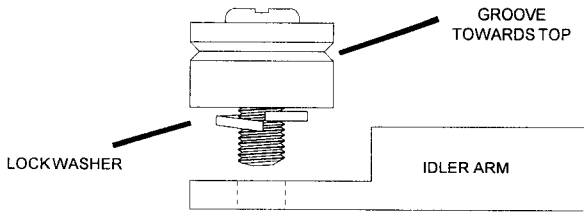

Section 17

INSTALLING SPOOL ASSEMBLY (P/N 003-2090)

Loosen the screw that secures the conduit through access hole located on top right rear handle with a 1/16" Allen wrench.

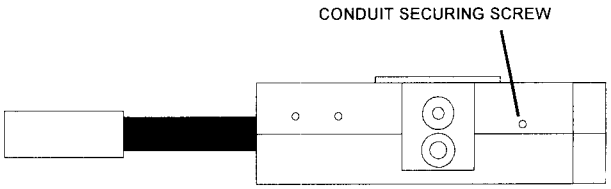

Remove conduit by pulling it out of the back of the gun.

Install spool liner, and secure with screw.

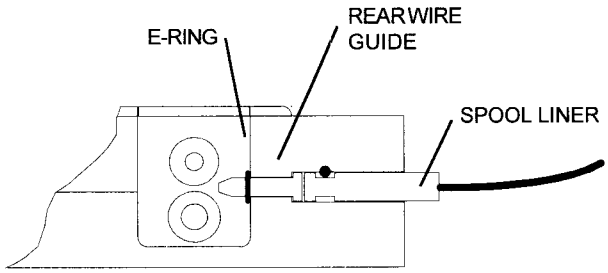

Remove both rear handle screws, and secure spool canister with longer screws provided.

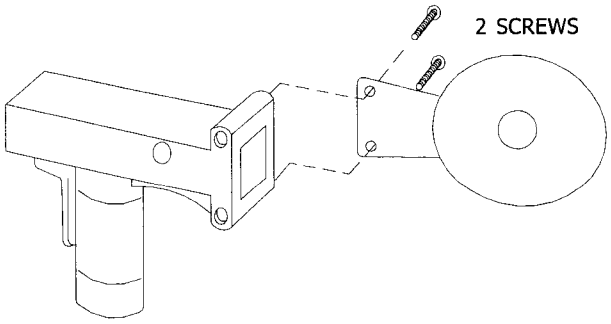

Section 18 SPOOL GUN SETUP

18.1 Loading Electrode Wire

Unscrew, and remove spool cover.

Apply tension to drive rolls, so the wire will be picked up and fed through the contact tip.

Straighten out first six inches of wire and push through liner.

Jog trigger until wire is picked up by drive rolls and fed through contact tip.

Hold brake assembly back towards top of gun, load spool onto shaft with wire coming off the bottom of the spool. Release brake assembly to rest on wire surface.

Replace spool cover, making sure opening is over liner.

Note: The brake assembly is designed to automatically control spool drag and keep the wire from jumping off the spool.

18.2 Disassembly Prince™XL/Spool Gun

Remove trigger pin with punch and remove trigger.

Remove six(6) handle screws and spool adapter if installed.

Remove barrel from gun, lossen barrel taper lock assembly and slide towards cup. Leave barrel inserted in gun body.

Pull handles apart.

Section 19 MAINTENANCE

Maintenance of the torch will normally consist of a general cleaning of the wire guide system, including tubes, drive rolls, and conduit at regular intervals. The only parts on the gun that are subject to normal wear are the conduit, contact tips, gas cups, drive rolls and barrel liners. A supply of those parts should be maintained on hand.

Proper coolant is a very important part of keeping the water cooled Prince™XL in good working condition. Any coolant which does not contain reactive sulfur or chlorine, and which specifically does not react with copper, brass or aluminum, may be used. One such mixture has proven extremely successfull when used in conjunction with a water re-circulator. It consists of the following 3:1 mixture:

Use 3 gallons distilled water (not deionized)
Use 1 gallon ethleyne glycol
Use 1 teaspoon liquid glycerin per gallon of mixture
The coolant flow rate should be 1 quart/minute at 35 p.s.i.

Section 20

TROUBLESHOOTING

Regardless of which torch or feeder used, all MK Products push-pull guns operate on the same principle. The 115 VAC or 42VAC slave motor in the feeder runs at a fast, constant speed, but has very low torque. It is always trying to feed more wire than the torch motor wants, and when the motor gets all it wants, it slows the slave motor, preventing a bird's nest. Because of the low torque produced by the slave motor, a brake system is used to prevent wire overrun rather than tension. The drag adjustment in the spindle is used simply to keep the wire slightly taut, so it will not unspool while feeding wire.

The 24 VDC torch motor is controlled by a solid state speed control and a pot located in the torch. The torch motor, potentiometer, and micro switch are connected to the cabinet/control box via a control cable and amphenol. If this cable becomes damaged, a variety of symptoms can occur, depending on which wire(s) break. To test, check each wire for continuity and shorts.

With the increased torque rating in the current Prince XL motor, P/N 211-0071, it now draws about twice as much current on start-up as the original Prince motors P/N's 211-0054 & 211-0056. Even though the duration of start-up is very short, about 15msec, it is too much for the standard 2A fuse to handle. For this reason, all 2A fuses in the motor circuitry (F1) should be changed to a 3AG 4A fast blow 250V fuse, P/N 151-0043. This new 4A fuse is sufficient for use on all model welding guns on the wire feeders, while still providing protection for the circuitry from any shorts in the motor or motor leads.

This fuse change includes all Cobramatic, Cobramatic II and CobraMig 250/260,
WC-1, Torpedo's, and any other motor circuits powering Prince XL or Spool Guns using motor P/N 211-0071.

Remember the micro switch in the torch activates both the 115 VAC or 42 VAC and 24 VDC circuits in the cabinet. Therefore, if the slave motor and brake solonoid operate, but the torch does not, look more toward the 24 VDC circuits, speed control, control cable, or the torch motor. If nothing operates, look more toward the 115 VAC or 42 VAC input, micro switch leads, or micro switch.

The complete pot assembly is connected to the motor and set into the handles. If the pot is disassembled, the pot knob can be put on the shaft in any position and secured with the set screw. Turn the knob fully CCW, then fully CW. This will self-align the pot, i.e., fully CCW will be minimum wire feed speed, and fully CW will be maximum wire speed.

TROUBLESHOOTING GUIDE

TROUBLE	CAUSE	REMEDY
No wire feed at torch, feeder not operating, i.e. no slave motor or brake solenoid.	4 amp fuse (F1) in feeder/control box blown.	Replace F1 fuse with 4A.
	Micro-switch defective/not being activated.	Replace switch. Check switch for operation.
	Broken electrical cable.	Check micro-switch wires for continuity.
No wire feed at torch, feeder operating properly.	4 amp fuse (F1) in feeder/Control box blown.	Check motor leads for shorts; then replace fuse.
	Bad potentiometer.	Check potentiometer with meter.
	Broken electrical cable.	Check motor and potentiometer wires for continuity.
	Bad speed control/PCB.	See specific cabinet/control box owners manual for speed control operation.
Wire feeds, but welding wire is not energized.	Loose or no cable connections.	Check all power connections
	Contactor control cable loose or in wrong position	Check power supply owners manual for location and type of contactor signal required, i.e., closing or 115 VAC.
	Welding power source.	Check power source manual.
Wire feeds erratically.	Excessive spool drag pressure	Decrease spool drag pressure.
	Dirty or worn conduit	Blow out or replace conduit
	Incorrect pressure on drive rolls	Adjust pressure at both feeder and torch
	Idler roll stuck.	Check for lock washer under idler roll, or replace if damaged.
	Wrong size contact tip.	See contact tip table.
Wire feeds one speed only.	Bad potentiometer.	Check with meter.
	Broken electrical cable.	Check potentiometer wires for continuity or short
	Bad speed control.	See specific cabinet/control owners manual for speed control operation.
Wire walks out of drive rolls.	Idler roll upside-down.	Place groove in idler roll toward top.
	Rear wire guide missing.	Replace wire guide
Poor gas/water flow	Incorrect placement of barrel insulator	Slide barrel insulator down and thread until it bottoms out, covering coolant ports and exposing gas ports.

Section 21 TESTING THE TORCH

21.1 Motor Check

Remove the torch connector from the cabinet.

Using the torch Amphenol, check the resistance across pins **"A"** and **"B"** (motor leads). The resistance across the motor should be between **5-10 ohms**.

If an open circuit or short exist, check the motor leads and motor independently.

21.2 Testing the Potentiometer

Using the torch Amphenol, check the resistance across pin **"D"** (wiper) and pin **"C"**. The resistance should vary from **0 - 5K ohms**.

Check the resistance across pin **"D"** (wiper) and pin **"G"**. The resistance should vary from **5K - 0 ohms**.

21.3 Testing the Micro Switch

Using the torch Amphenol, check for continuity across pins **"E"** and **"F"** when the trigger is pressed.

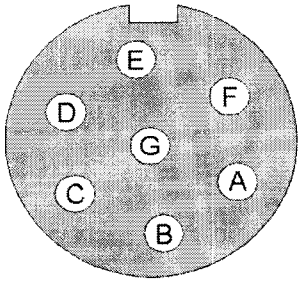

"W" Clocked
Amphenol Connector
Viewed from front of connector

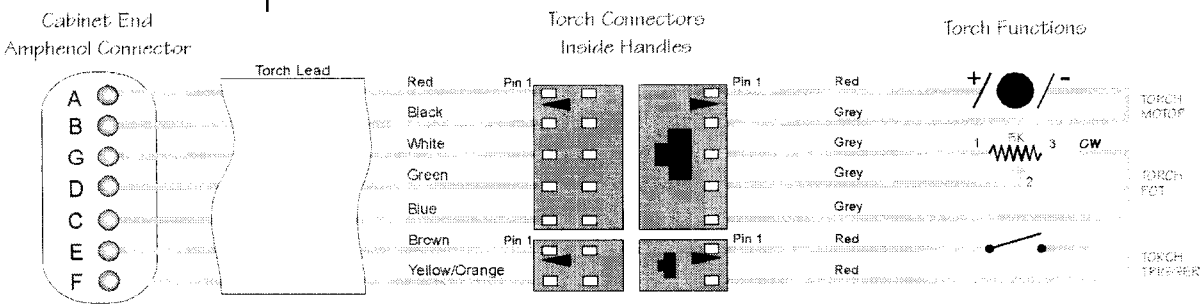

Section 22 Head Body, Exploded View
MK P/N 003-1972

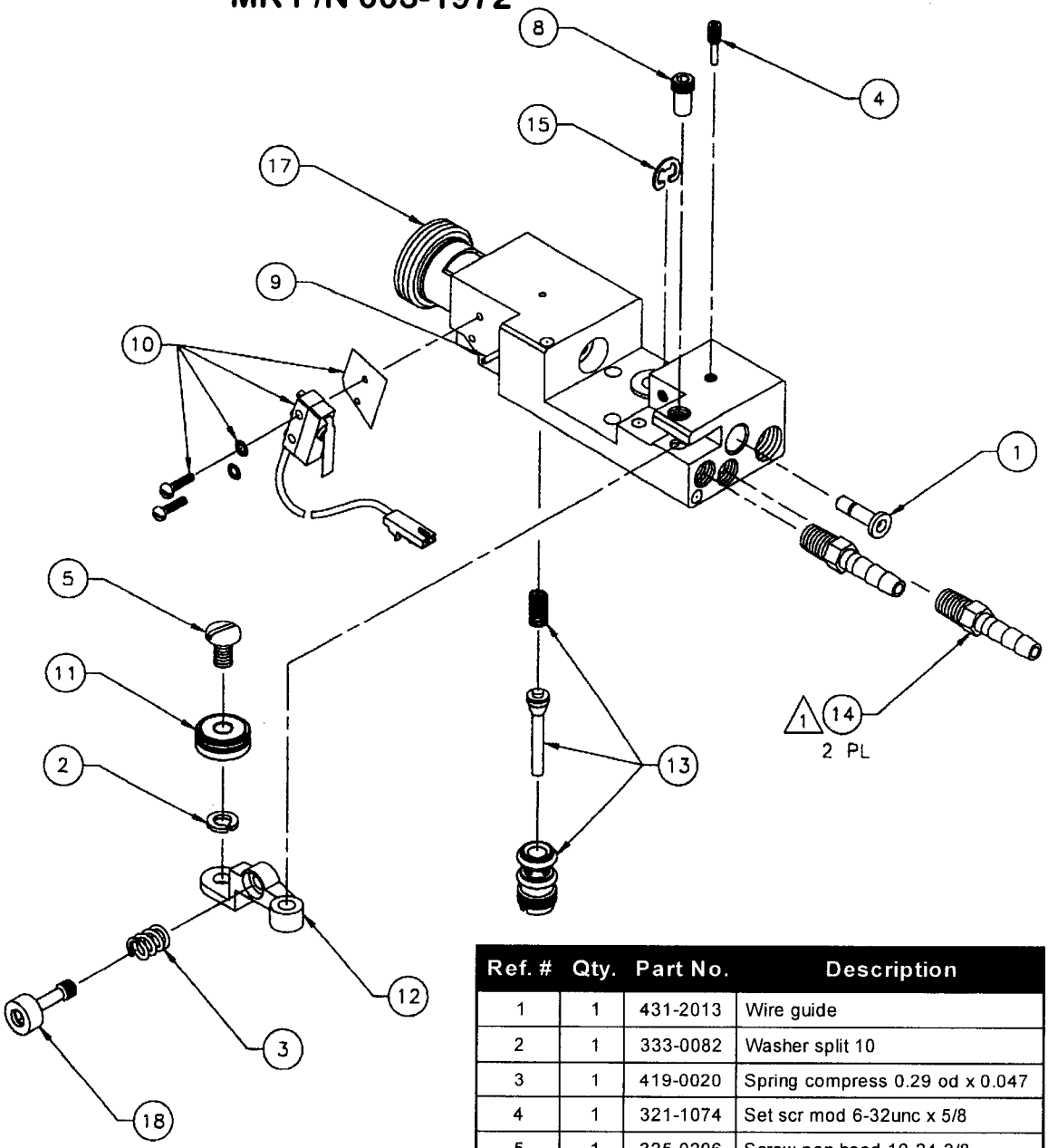

Ref. #	Qty.	Part No.	Description
1	1	431-2013	Wire guide
2	1	333-0082	Washer split 10
3	1	419-0020	Spring compress 0.29 od x 0.047
4	1	321-1074	Set scr mod 6-32unc x 5/8
5	1	325-0206	Screw pan head 10-24-3/8
6			
7			
8	1	431-1427	Pivot pin
9	1	421-0129	Pin spring 0.063 x 0.437
10	1	003-0568	Micro switch assy
11	1	511-0001	Idler wire feed assy
12	1	431-1424	Idler arm
13	1	001-0562	Gas valve cobra
14	2	431-3034	Fitting 3/16 hose to 1/16-27npt
15	1	313-0008	E-ring shaft 0.188
16			
17	1	002-0573	Main body assy
18	1	002-0583	Adjust screw idler arm

tb-1972b.tbl

Note: If Cobramatic Wire Feeder is equipped with a gas solenoid kit, a modified gas value stem (p/n 431-1080) must be installed in torch to allow gas flow from cabinet value.

Section 23 Prince XL, Torch Head Exploded View MK P/N 003-1259

No.	Qty	Part No.	Description
1	1	003-0585	Trigger Assy., Prince XL
2	1	435-3124	Spring, Door, Prince XL
3	2	333-0005	Washer, Split, #6. ST
4	4	333-0003	Washer, Split, #4. ST
5	3	328-0003	Screw, Shc, 4-40 x 0.50
6	2	336-0056	Screw, Pnh, Phil, 4-40 x 1.50
7	2	336-0003	Screw, Pnh, Phil, 4-40 x 0.50
8	2	336-0070	Screw, Pnh, Phil, 6-32 x 1.50
9	1	003-1972	Head Body, Prince XL
10	1	003-0567	Potentiometer
11	1	421-0408	Pin, Dowel, Ø0.093 x 2.00 LG
12	1	421-0409	Pin, Dowel, Ø0.093 x 1.25 LG
13	1	211-0071	Motor
14	1	436-0136	Handle, Right
15	1	436-0137	Handle, Left
16	1	511-0101	Drive Roll, Gold
17	1	431-3117	Door, Prince XL
18	1	003-1974	Clamp, Leads
19	1	437-0237	Spacer Molded

1259d.tbl

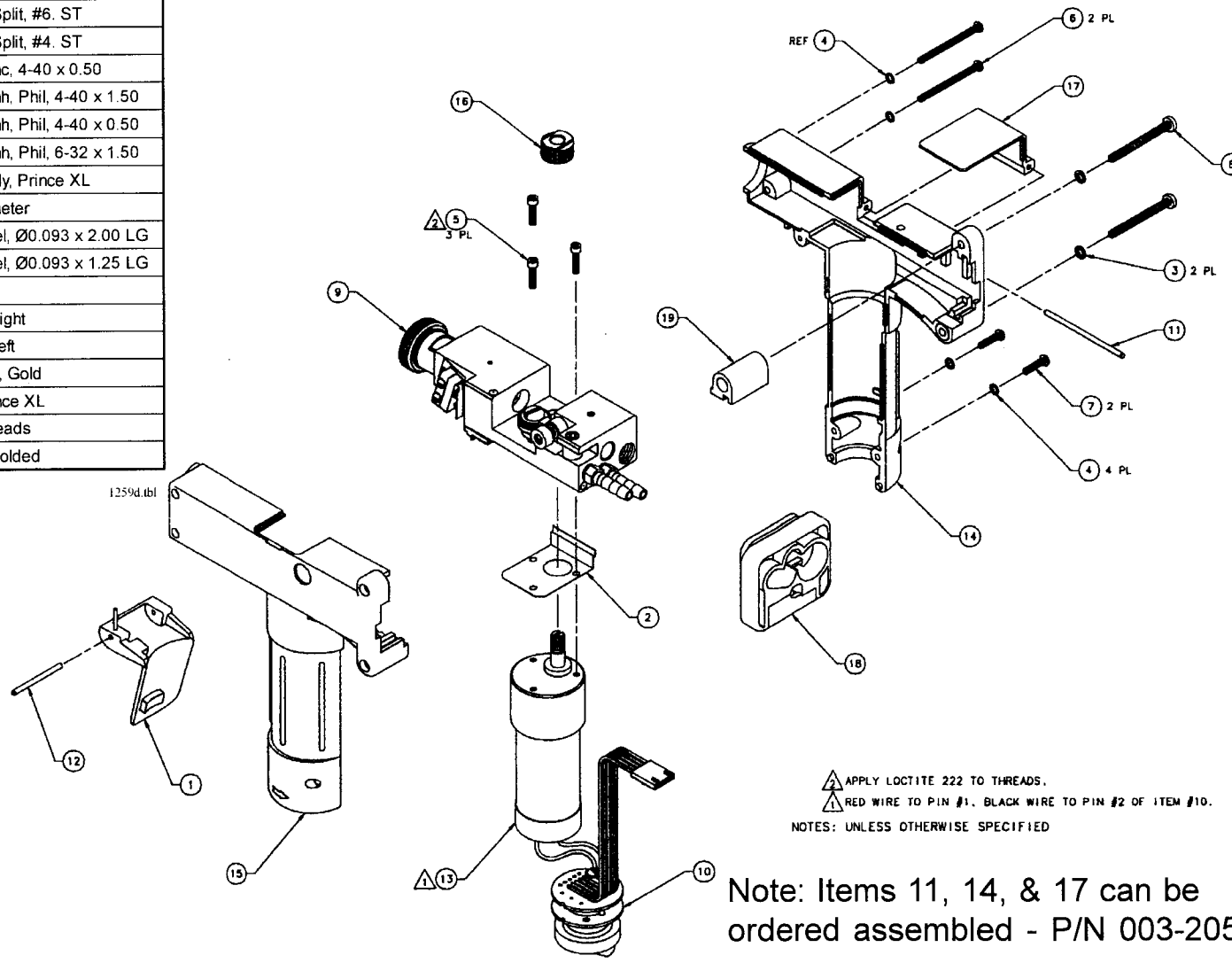

2 APPLY LOCTITE 222 TO THREADS.
1 RED WIRE TO PIN #1, BLACK WIRE TO PIN #2 OF ITEM #10.
NOTES: UNLESS OTHERWISE SPECIFIED

Note: Items 11, 14, & 17 can be ordered assembled - P/N 003-2056

Section 24 Prince XL, Spool Gun 25ft. LE P/N K1692-1

No.	Qty.	Part No.	Description
1	1	003-1259	Assy Head
2	1	153-0857	Conn Molex 5 Pos
3	1	153-0856	Conn Molex 2 Pos
4	1	001-1317	Lead 25 Ft. Spool
5	1	003-1980	Barrel Straight 7.00
6	7	153-0852	Pin
7	1	411-0045	Tie Wrap
8	.13 ft	739-0006	Tube H/S Ø1/4
9	1	003-2021	Assy. Spool MK

Tb-1390c.tbl

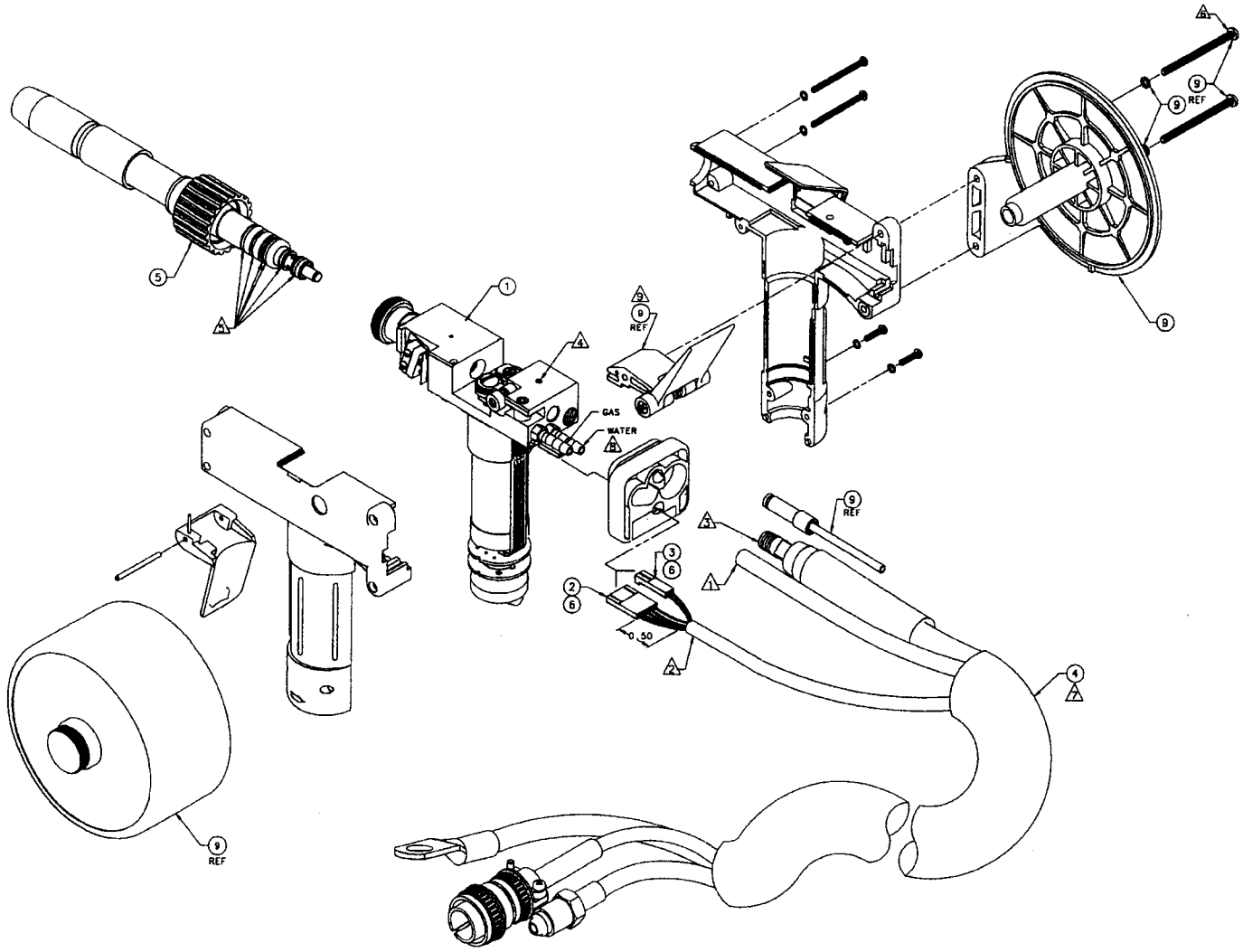

6 REPLACE SPACER (437-0237) WITH ASSY BRAKE (003-2072)

6 SHIELD WATER RETURN FITTING WITH ITEM #8.

7 AFTER INSTALLING LEAD ASSEMBLY, PLACE SPIRAL WRAP, THEN SECURE SNAKESKIN COVER WITH TIE WRAPS.

6 INSTALL MOUNTING SCREW THROUGH MIDDLE HOLE.

5 APPLY PARKER SILICONE BASE "SUPER LUBE" TO O-RINGS.

4 ITEM USED TO LOCK CONDUIT IN PLACE.

3 APPLY NADLOX COMPOUND MK#823-0029 TO THREADS.

2 STRIP CABLE JACKET 0.63 AND WIRES 0.12 THEN INSTALL WIRES TO ITEM #6.

RED WIRE TO PIN #1
BLACK WIRE TO PIN #2
WHITE WIRE TO PIN #3
GREEN WIRE TO PIN #4
BLUE WIRE TO PIN #5
] TO ITEM #2

BROWN WIRE TO PIN #1
YELLOW WIRE TO PIN #2
] TO ITEM #3

1 PLACE GAS LEAD, THEN SECURE WITH ITEM #7.

NOTES: UNLESS OTHERWISE SPECIFIED

Section 25 Air Cooled Straight Barrel Assy. 7" Exploded View LE P/N S23978-23 (MK P/N 003-1980) 150 AMP, 100% Duty Cycle

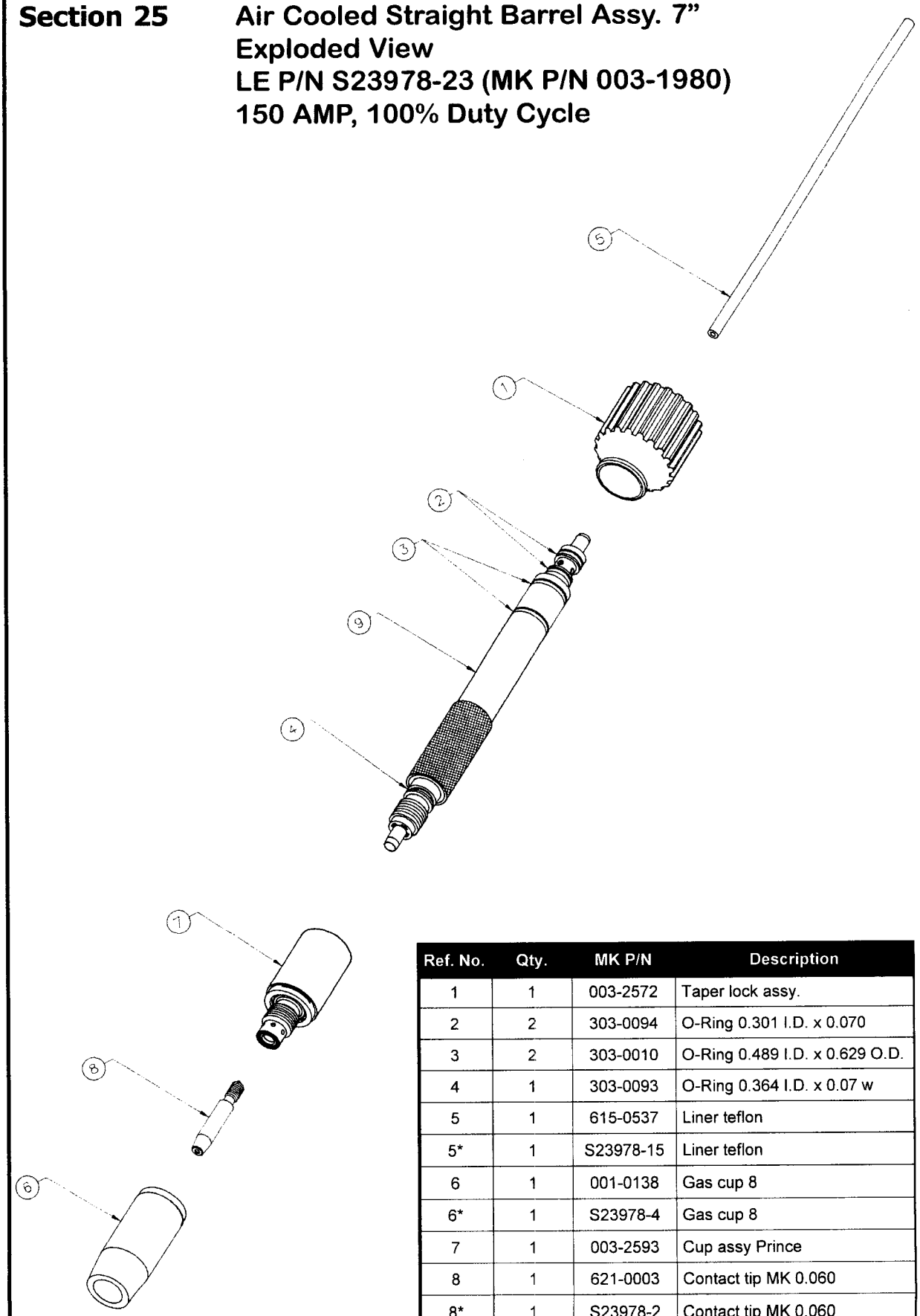

Ref. No.	Qty.	MK P/N	Description
1	1	003-2572	Taper lock assy.
2	2	303-0094	O-Ring 0.301 I.D. x 0.070
3	2	303-0010	O-Ring 0.489 I.D. x 0.629 O.D.
4	1	303-0093	O-Ring 0.364 I.D. x 0.07 w
5	1	615-0537	Liner teflon
5*	1	S23978-15	Liner teflon
6	1	001-0138	Gas cup 8
6*	1	S23978-4	Gas cup 8
7	1	003-2593	Cup assy Prince
8	1	621-0003	Contact tip MK 0.060
8*	1	S23978-2	Contact tip MK 0.060
9	1	002-0575	Brazed barrel air cooled

* Lincoln Electric part number

tb-1980.tbl

Section 26 Air Cooled 45° Barrel Assy. 7" Exploded View LE P/N S23978-25 (MK P/N 003-1986) 150 AMP, 100% Duty Cycle

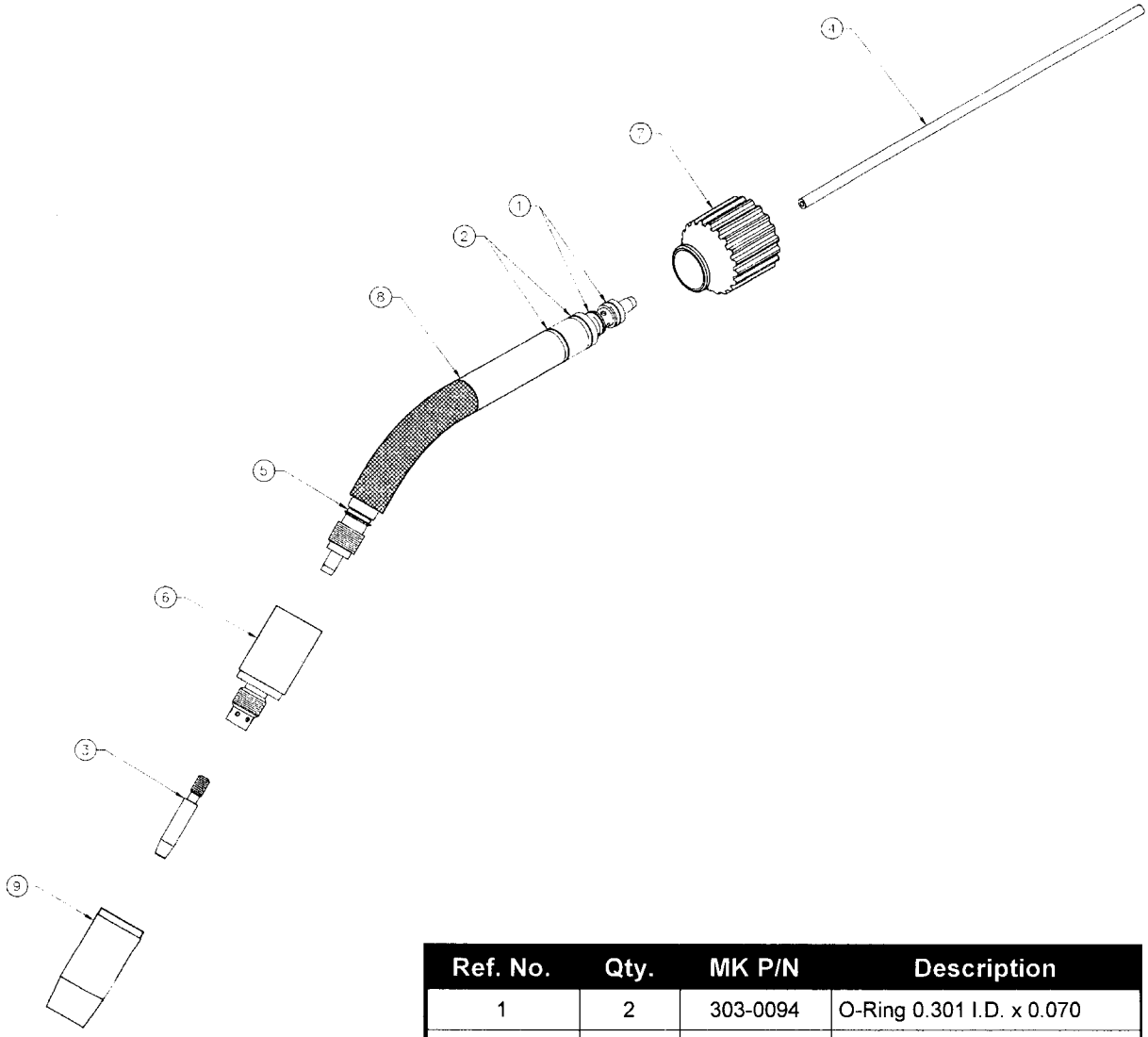

Ref. No.	Qty.	MK P/N	Description
1	2	303-0094	O-Ring 0.301 I.D. x 0.070
2	2	303-0010	O-Ring 0.489 I.D. x 0.629 O.D.
3	1	621-0003	Contact tip MK 0.060
3*	1	S23978-2	Contact tip MK 0.060
4	1	615-0539	Liner teflon 0.175od
4*	1	S23978-26	Liner teflon 0.175od
5	1	303-0093	O-Ring 0.364 I.D. x 0.07 w
6	1	003-2593	Cup air barrel Prince XL
7	1	003-2572	Taper lock assy Prince XL
8	1	002-0591	Barrel curved 45° a/c
9	1	001-0138	Gas cup 8
9*	1	S23978-1	Gas cup 8

* Lincoln Electric part number

tb-1986.tbl

Section 27 Water Cooled Straight Barrel Assy. 7" Exploded View LE P/N S23978-22 (MK P/N 003-1973) 300 AMP, 100% Duty Cycle

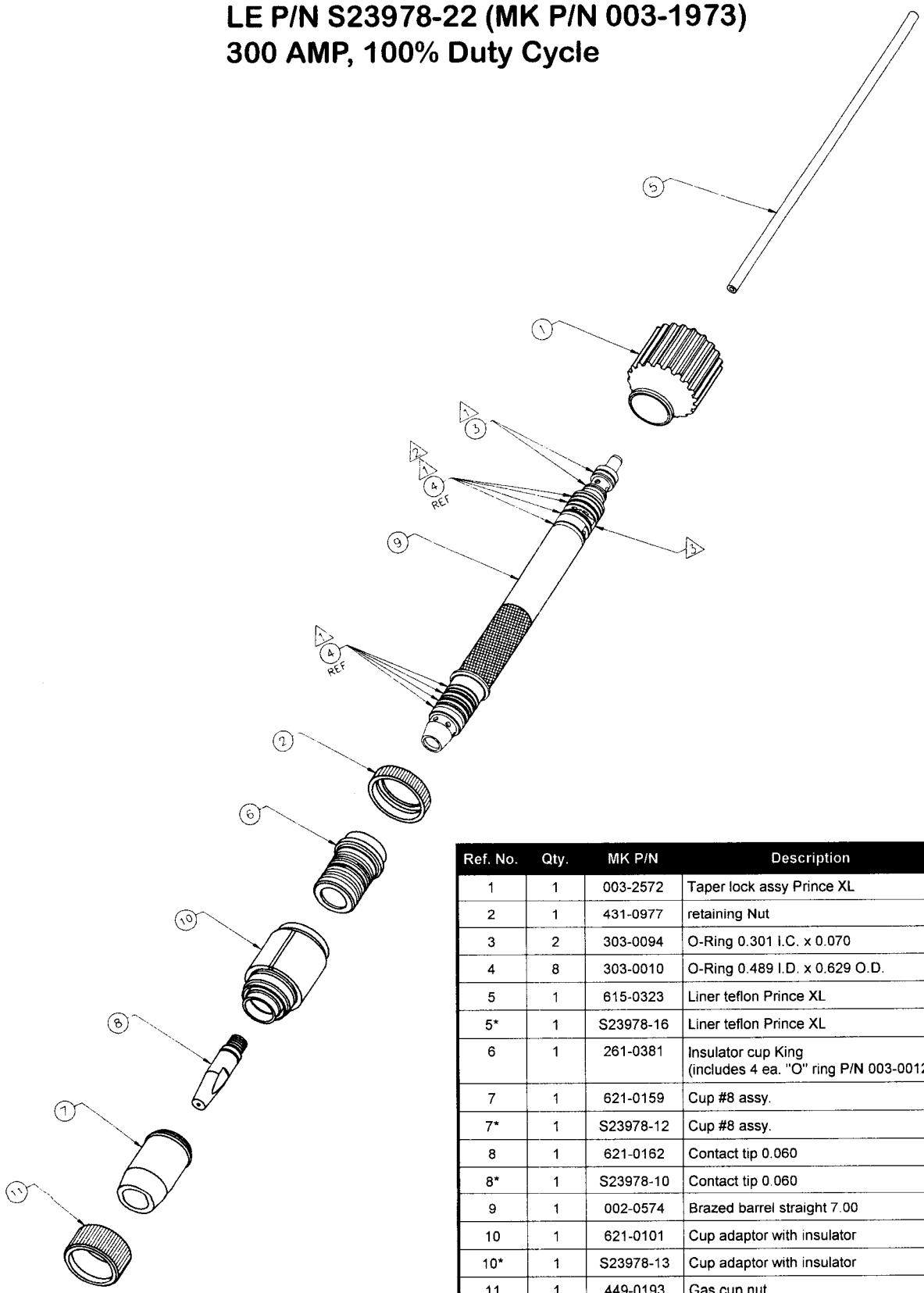

Ref. No.	Qty.	MK P/N	Description
1	1	003-2572	Taper lock assy Prince XL
2	1	431-0977	retaining Nut
3	2	303-0094	O-Ring 0.301 I.C. x 0.070
4	8	303-0010	O-Ring 0.489 I.D. x 0.629 O.D.
5	1	615-0323	Liner teflon Prince XL
5*	1	S23978-16	Liner teflon Prince XL
6	1	261-0381	Insulator cup King (includes 4 ea. "O" ring P/N 003-0012)
7	1	621-0159	Cup #8 assy.
7*	1	S23978-12	Cup #8 assy.
8	1	621-0162	Contact tip 0.060
8*	1	S23978-10	Contact tip 0.060
9	1	002-0574	Brazed barrel straight 7.00
10	1	621-0101	Cup adaptor with insulator
10*	1	S23978-13	Cup adaptor with insulator
11	1	449-0193	Gas cup nut
11*	1	S23978-14	Gas cup nut
12	1	751-0011	Round vinyl cap

*Lincoln Electric part number

tb-1973.tbl

Section 28 Water Cooled 45° Barrel Assy. 7" Exploded View LE P/N S23978-24 (MK P/N 003-1987) 300 AMP, 100% Duty Cycle

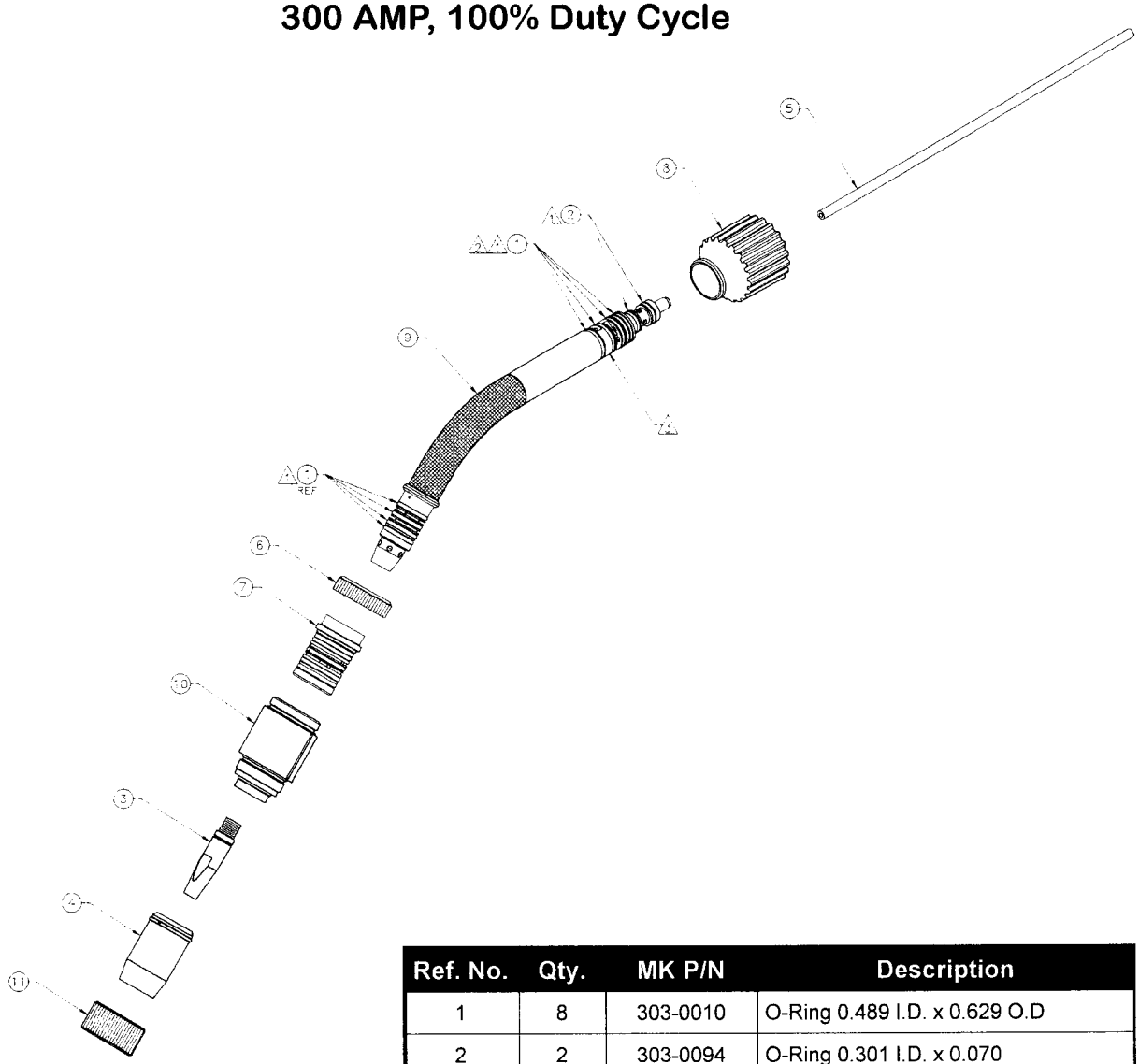

Ref. No.	Qty.	MK P/N	Description
1	8	303-0010	O-Ring 0.489 I.D. x 0.629 O.D
2	2	303-0094	O-Ring 0.301 I.D. x 0.070
3	1	621-0162	Contact tip 0.060
3*	1	S23978-10	Contact tip 0.060
4	1	621-0159	Cup #8 assy
4*	1	S23978-12	Cup #10 assy
5	1	615-0539	Liner teflon 0.175od x 8.06
5*	1	S23978-26	Liner teflon 0.175od x 8.06
6	1	431-0977	Retaining nut
7	1	261-0381	Insulator cup (includes 4 ea. "O" ring P/N003-0012)
8	1	003-2572	Taper lock assy.
9	1	002-0592	Barrel curve 45° w/c
10	1	621-0101	Cup adapter with insulator
11	1	449-0193	Gas cup nut
12	1	751-0011	Round vinyl cap

* Lincoln Electric part number

tb-1987.tbl

Section 29 Taper Lock Nut Assembly, Exploded View MK P/N 003-2572

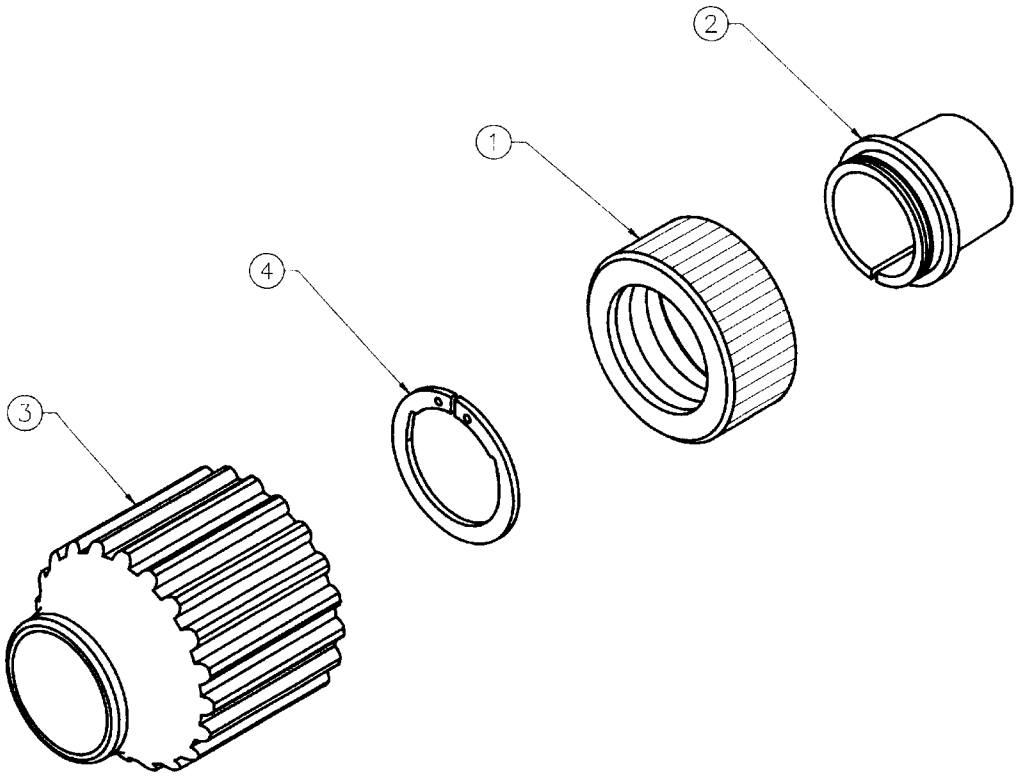

Ref. No.	Qty.	MK P/N	Description
1	1	431-1416	Taper lock nut
2	1	431-1423	Taper lock collar
3	1	437-0227	Taper lock insulator
4	1	313-0027	Snap ring 0.750 shaft

tb-2572.tbl

Section 30 Spool Assembly, Exploded View
MK P/N 003-2090

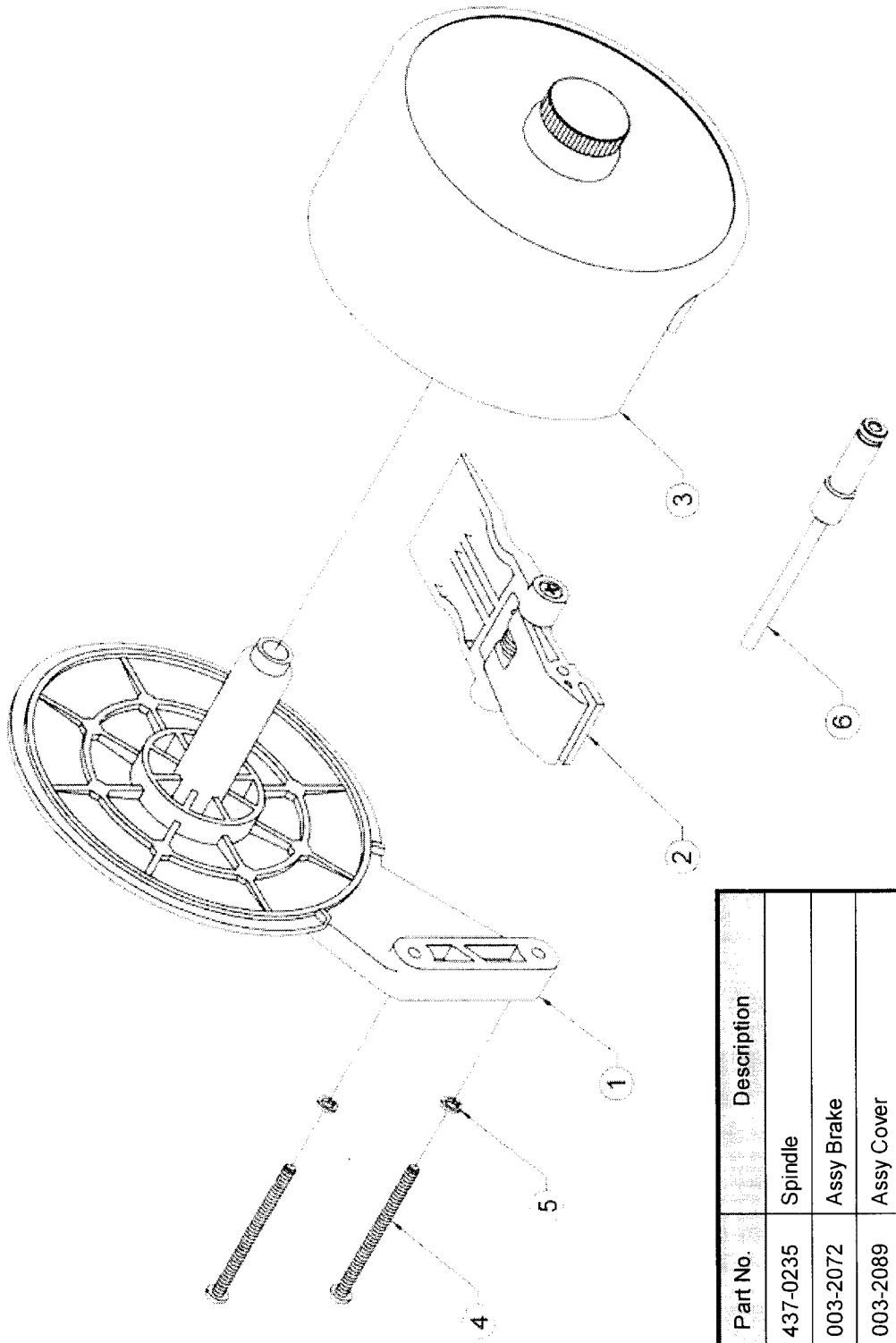

No.	Qty.	Part No.	Description
1	1	437-0235	Spindle
2	1	003-2072	Assy Brake
3	1	003-2089	Assy Cover
4	2	336-0073	Scr Pan HD Phil 6-32 x 2.00 ST
5	2	333-0005	Washer Split #6
6	1	003-0198	Wire Guide

003-2090.tbl

Section 31 AIR COOLED LEAD ASSY.

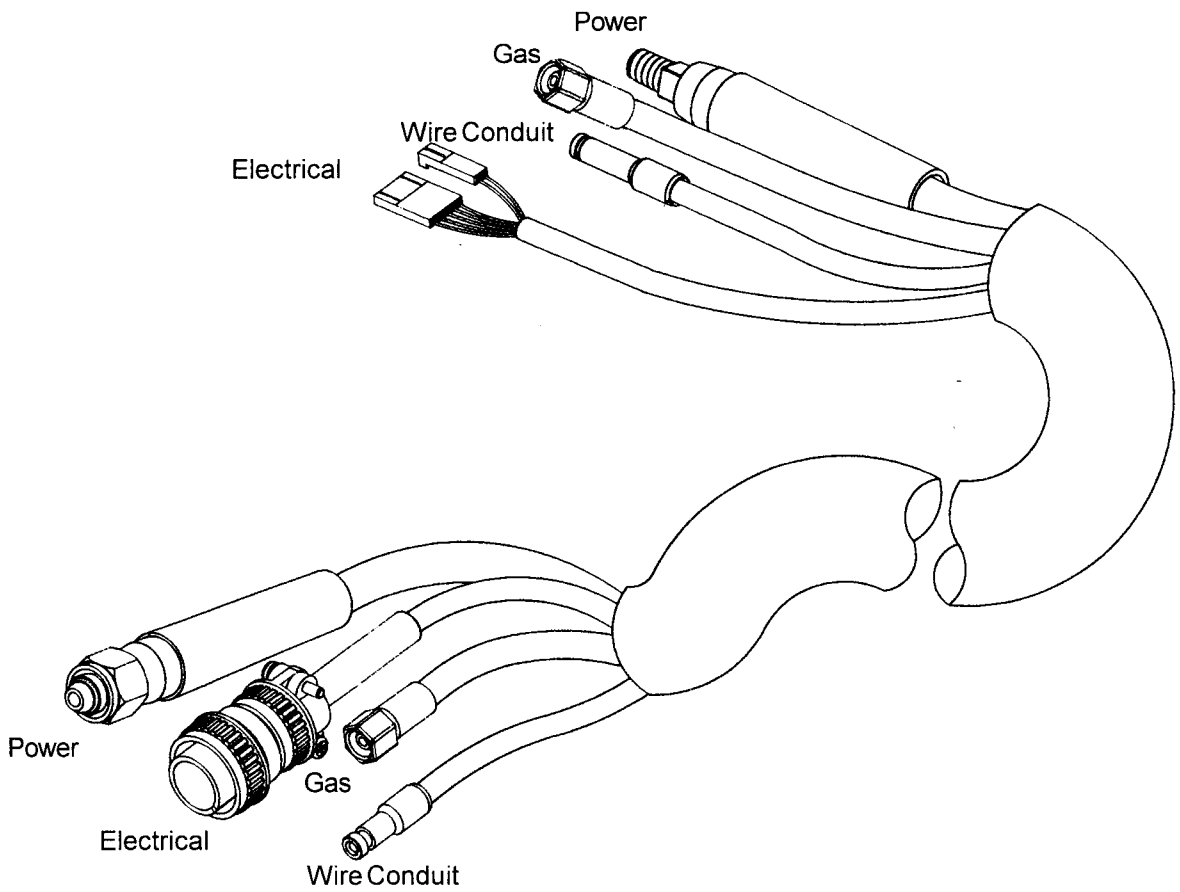

Prince XL Air Cooled Cable Assemblies						
Length	**Complete Cable Assy***	**LE P/N Conduit (MK P/N)**	**#2 Pwr Cable***	**Electrical Cable***	**Gas Hose***	**Snake Skin***
15' / 4.5m	005-0295	S23978-8 (615-0007)	001-2527	005-0305	001-0537	931-0110
25' / 7.6m	005-0296	S23978-6 (615-0008)	001-2528	005-0306	001-0538	931-0122
50' / 15.2m	005-0298	S23978-7 (615-0068)	001-1042	005-0308	001-0665	931-0122(2)

* MK Part Numbers

Cable Fittings for Air Cooled Torches			
Power Cable	Torch End Fitting	Cabinet End Lug Assy	
MK Part No. --->	431-1128	003-1328	
Gas Hose		Nut & Insert	Ferrule
MK Part No. --->		753-0464	469-0161

Spool Gun Lead Assemblies					
Length	Complete Assy.	Power Cable	Electric Cable	Gas Hose	Snake Skin
25' / 7.6m	001-1317	843-0484	005-0306	522-0176	931-0122
50' / 15.2m	001-1318	843-0485	005-0308	522-0178	931-0122(2)

sp-leads.tbl

Section 32 WATER COOLED LEAD ASSY.

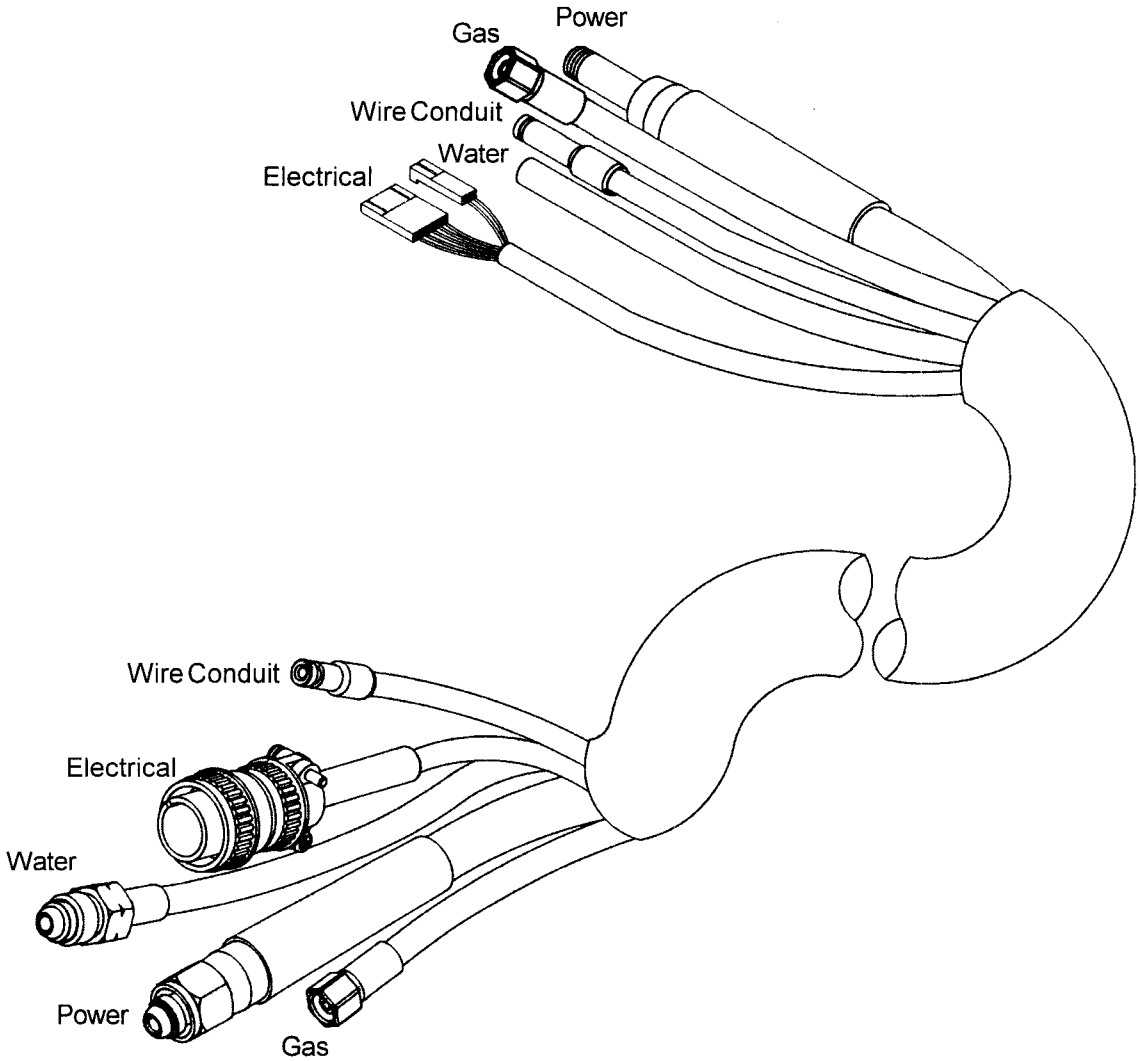

Prince XL Water Cooled Cable Assemblies							
Length	Complete Cable Assy*	LE P/N Conduit (MK P/N)	#4 Water/ Power Cable*	Electrical Cable*	Gas Hose*	Water Hose*	Snake Skin*
15' / 4.5m	005-0301	S23978-8 (615-0007)	001-2521	005-0305	001-0537	001-0529	931-0110
25' / 7.6m	005-0302	S23978-6 (615-0008)	001-2524	005-0306	001-0538	001-0530	931-0122
50' / 15.2m	005-0304	S23978-7 (615-0068)	843-0338	005-0308	001-0665	001-0667	931-0122(2)

*MK Part Number

Cable Fittings for Water-Cooled Torches			
Water / Power Cable	Torch End Fitting	Cabinet End Lug Assy	Ferrule #650 1ea
MK Part No. --->	003-0590	003-1327	469-0002
Gas Hose		Nut & Insert	Ferrule
MK Part No. --->		753-0464	469-0161
Water Hose	Nipple	Nut	Ferrule
MK Part No. --->	753-0656	753-3379	469-0161

Section 33 Spool Gun Lead Assy.

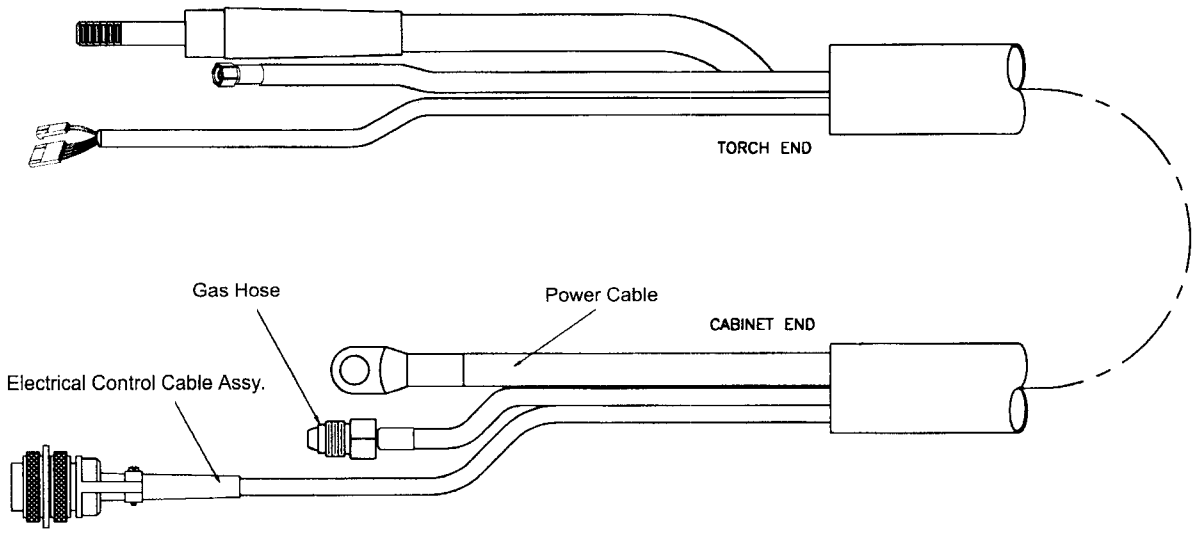

Spool Gun Lead Assemblies					
Length	**Complete Cable Assy**	**#2 Pwr Cable**	**Electrical Cable**	**Gas Hose**	**Snake Skin**
25' / 7.6m	001-1317	843-0484	005-0306	522-0176	931-0122
50' / 15.2m	001-1318	843-0485	005-0308	522-0178	931-0122(2)

Power Cable and Gas Hose Fittings			
Power Cable	Torch End Fitting	Lug End Fitting	
Part No.-->	431-1128	185-0410	
Gas Hose	Ferrule	Nut & Nipple	Ferrule
Part No. -->	449-0161	753-0159 / 753-0656	449-0161

Section 34

Prince Spool Gun Controls

For All CV and CC Power Supplies

The WC-1(P/N 001-3062) is designed to hook-up to any CV or CC power supply having its own contactor. CC Posa Start "run-in-speed" is included as a standard feature. The control operates on 115VAC, 50-60hz power. For machines such as gas drives that do not have contactors, the Contactor Box P/N 001-3066 must be used in addition to the WC-1.
Although this control will work on any power supply we have developed other controls that are less expensive and easier to install.

For Miller Power Supplies with 14 pin Amphenols

Connects directly to Miller power supplies with 14 pin amphenols that are classified as type 6 or 9 and Thermal Dynamics units, such as:

MILLER SUPPLIES		*THERMAL DYNAMICS*
Millermatic 200	*Regency's*	*Thermal Arc 300GMS CC/CV*
Shopmaster	*Deltaweld's*	
CV/CC XMT's	*CP Series*	
Trailblazer 250		

Any Gas-drive that has a CV tap and contactor installed with a 14 pin amphenol

For L-Tec Migmaster 250 & ESAB Migmaster 251

An amphenol adaptor cable and gas/power lug are all that is needed to connect to the Migmaster 250. Adaptor kit includes everything needed.
A panel kit plugs directly into the front of the Migmaster 251 and includes everything that is needed to interface the spool gun.

Note: In order to achieve proper operation with the Prince™ and Prince™ XL Spool Guns, please install the 800 ipm spool gun motor P/N 211-0071, if not already in use.

For Power Supplies that Supply an Auxiliary 26 VAC

This Generic Torpedo is designed to hook-up to CV power supplies that supply an auxiliary 26 VAC @ 1.7 amps and uses a closing contact signal. The unit is supplied with bare wires that must be connected to the power supply. Some examples of power supplies that can be hooked-up are:

Lincoln SP-250 & Wirematic 250 - Airco Dip-Pak 200, 225 & 250 - Beta-Mig 200 & Beta-Mig LF

Consult factory for details.

For Millermatic 250 and Vintage

The easy to install, plug-in module and the spool gun are all that is needed to get up and running.

For Millermatic 250X

Easy to install adapter cable using Millermatic 250X speed control.

For Hobart BetaMig 251

The easy to install, plug-in module and the spool gun are all that is needed to complete the system.

For Panasonic Gunslinger

Easy to install adapter cable using Gunslinger speed control.

Section 35

Ordering Information

Weld Control P/N's		Spool Gun P/N's	
001-3062	WC-1		
001-3066	Contactor Box	216-725	25' Spool Gun
005-0261	Miller Torpedo	216-750	50' Spool Gun
005-0206	L-Tec Migmaster 250		
005-0264	Generic Torpedo		
S51902-1 (LE)	Generic Torpedo		
005-0205	Millermatic 250 & Vintage		
005-0624	ESAB Migmaster 251		
005-0590	Hobart BetaMig Kit 251		
005-0629	Millermatic 250X		
005-0617	Panasonic Gunslinger		

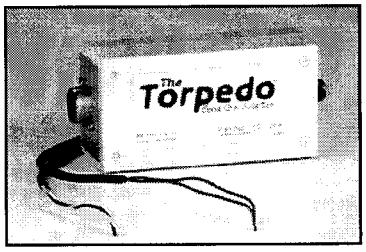

005-0264

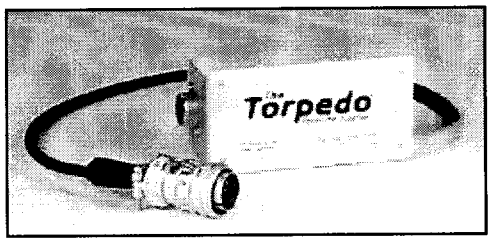

005-0261

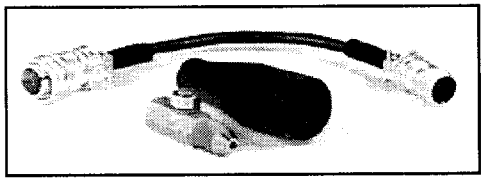

005-0206

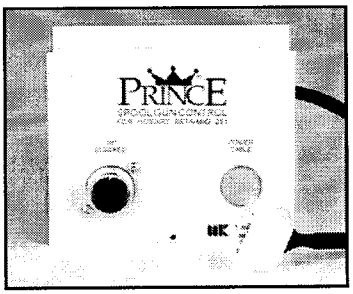

005-0590

005-0205

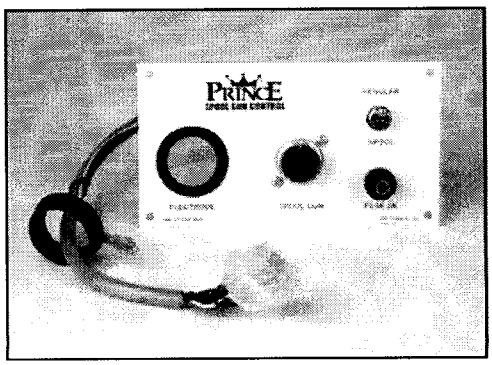

005-0624

MK WARRANTY REPAIR STATIONS

for MK Products

ALABAMA

AIRGAS MID-SOUTH
Birmingham, AL
205/251-6835

WELDING ENGINEERING SUPPLY CO.
Prichard, AL
334/457-8681

ARIZONA

PRAXAIR
Phoenix, AZ
602/269-2151

ARKANSAS

APPLIED SERVICES, INC.
Benton, AR
501/860-6464

RELIABLE WELDING REPAIR
Greenwood, AR
501/996-6688

CALIFORNIA

ADVANCED WELDER REPAIR
Commerce, CA
323/263-7383

ARC PRODUCTS
San Diego, CA
619/628-1022

CAL-WELD SUPPLY
Fresno, CA
209/445-0131

EMCO EAST
Concord, CA 94520

PRAXAIR DISTRIBUTION (ARC RENT)
Long Beach, CA
562/427-0099

R. J. KATES
San Diego, CA
619/565-6960

RED-D-ARC, INC.
Carson, CA

SO-CAL AIRGAS
Gardena, CA
310/523-9355

COLORADO

INDUSTRIAL GAS PROD. & SUPPLY
Colorado Springs, CO
719/473-1947

WELDERS & EQUIP. SVC. & TESTING
Littleton, CO
303/932-8755

WESTERN SLOPE WELDER REPAIR
Grand Junction, CO
970/243-9616

FLORIDA

A & I SPECIALTIES
Lehigh Acres, FL
941/368-7435

ACTION WELDING SUPPLY
Jacksonville, FL
904/786-2254

AMVEL CORPORATION
Miami, FL
305/592-5678

ELECTRICAL WELDERS SERVICE
Orlando, FL 32808
407/290-9551

HOLOX LTD.
Merrit Island, FL
407/454-4106

HAUN SYSTEMS REPAIR
Orlando, FL
407/872-0011

ROPER ELECTRIC MOTOR SERVICE
Panama City, FL 32405
850/769-6643

SMITTY'S WELDER SERVICE
West Palm Beach, FL
561/845-1224

TRI-GAS
Miami, FL
305/592-3180

GEORGIA

MC CULLOUGH ELEC. MOTOR SVC.
Atlanta, GA
404/688-5251

MK WARRANTY REPAIR STATIONS

for MK Products

B&W INDUSTRIAL SERVICES
Augusta, GA
706/738-8722

IDAHO

NORCO
Boise, ID
208/336-1643

ILLINOIS

BODINE ELECTRIC OF DECATUR
Decatur, IL
217/423-2593

INDUSTRIAL WELDER REBUILDERS
Alsip, IL
708/371-5688

PCI ENERGY SERVICES
Lake Bluff, IL
847/680-8100

RELIABLE EQUIPMENT REPAIR
Hamel, IL
618/633-5000

INDIANA

APCO GAS TECH
Speedway, IN
317/481-4550

EVANSVILLE ARMATURE, INC.
Evansville, IN
812/428-9034

IOWA

CENTRAL STATES AIRGAS
Des Moines, IA
515/266-1111

CEDAR RAPIDS WELDING SUPPLY
Cedar Rapids, IA
319/365-1466

KANSAS

KANOX
Hutchinson, KS
316/665-5551

KENTUCKY

GENERAL WELDING PRODUCTS
Louisville, KY
502/635-5218

LOUISIANA

GREENE WELDING SUPPLY
West Monroe, LA
318/340-9206

RED BALL OXYGEN CO.
Shreveport, LA
318/425-3211

MICHIGAN

APEX WELDING GASES & SUPPLY
Muskegon Heights, MI
616/722-3185

WESAR COMPANY
Three Rivers, MI
616/483-9125

MINNESOTA

MINNEAPOLIS OXYGEN CO.
Minneapolis, MN
612/588-8855

OXYGEN SERVICE CO.
St. Paul, MN
612/644-7273

MISSOURI

CEE-KAY SUPPLY, INC.
St. Louis, MO
324/644-3500

P.G. WALKER
Springfield, MO
417/862-1745

NORTH CAROLINA

INDUSTRIAL MAINTENANCE OVERFLOW
Fletcher, NC
704/684-2000

M & L WELDER REPAIR
Asheville, NC
828/250-9353

MACHINE & WELDING SUPPLY CO.
Dunn, NC
910/892-4016

NATIONAL WELDERS
High Point, NC
910/882-1110

MK WARRANTY REPAIR STATIONS

for MK Products

NORTH CAROLINA (contd.)
NATIONAL WELDERS SUPPLY CO.
Charlotte, NC
704/392-7317

OHIO

ALBRIGHT WELDING SUPPLY
Wooster, OH
330/264-2021

ARC EQUIPMENT COMPANY
Struthers, OH 44471
333/750-9353

CnD MACHINE, INC.
Canton, OH 44706
330/478-8811

VALLEY NATIONAL GASES
Lima, OH
419/228-1008

RICK'S WELDER REPAIR SERVICE
Eastlake, OH
440/269-1204

VALLEY NATIONAL GASES
Toledo, OH
419/241-9114

WELDINGHOUSE, INC.
Cleveland, OH
216/524-1955

OKLAHOMA

BILL'S WELDER REPAIR
Oklahoma City, OK
405/232-4799

AIRGAS MID-SOUTH
Tulsa, OK
918/582-0885

RITE-WELD SUPPLY, INC
dba OKLAHOMA WELDERS SUPPLY
Madill, OK
580/795-5561

PENNSYLVANIA

GEOVIC WELDING SUPPLY
Milton, PA
717/742-9377

J.A. CUNNINGHAM EQUIPMENT, INC.
Philadelphia, PA
215/426-6650

VALLEY NATIONAL GASES
Pittsburgh, PA
412/281-1835

SOUTH CAROLINA

IND'L ELECTRIC REWINDING CO. OF SUMTER
Sumter, SC
803/773-9366

TENNESSEE

NEXAIR
Memphis, TN
901/523-6821

TEXAS

AIRGAS HOUSTON
Houston, TX
713/462-8027

DENISON OXYGEN
Denison, TX
903/465-3369

RITE-WELD SUPPLY, INC
Fort Worth, TX
817/626-8237

VIRGINIA

NORFOLK WELDERS SUPPLY
Norfolk, VA
804/622-6571

WASHINGTON

A-L WELDING PRODUCTS
Tukwila, WA
425/228-2218

CASCADE AIRGAS/WELDER'S SUPPLY
Seattle, WA
206/224-0433

OXARC, INC
Spokane, WA
509/535-7794

OXYGEN SALES & SERVICE, INC
Tacoma, WA
253/473-2282

MK WARRANTY REPAIR STATIONS

for MK Products

PACIFIC WELDING SUPPLIES
Tacoma, WA
253/572-5302

PRAXAIR
Seattle, WA
206/624-7033

AMERICAN EQUIPMENT SERVICES
Kent, WA
253/395-9947

WISCONSIN

BENTLEY WELDING SUPPLY
Brookfield, WI
414/938-6365

CANADA

ARC & GENERATOR REPAIR
Garson, Ontario
705/525-2141

INDUSTRIAL ELECTRONIC SERVICES
Calgary, Alberta
403/279-3432

M.R.T. REPAIR CENTER, INC.
Montreal, Québec
514/648-0800

OZARK ELECTRICAL MARINE LTD.
St. John's Newfoundland

PEEL ENGINES
Mississauga, Ontario
905/670-1535

PROMOTECH électrique, Inc.
Fleurimont, Québec
819/822-2111

WELDERS SUPPLY
Winnipeg, Manitoba
204/772-9476

WELDING WIDE SERVICES, INC.
Brampton, Ontario
905/874-9992

WARNING	● Do not touch electrically live parts or electrode with skin or wet clothing. ● Insulate yourself from work and ground.	● Keep flammable materials away.	● Wear eye, ear and body protection.
Spanish **AVISO DE PRECAUCION**	● No toque las partes o los electrodos bajo carga con la piel o ropa mojada. ● Aíslese del trabajo y de la tierra.	● Mantenga el material combustible fuera del área de trabajo.	● Protéjase los ojos, los oídos y el cuerpo.
French **ATTENTION**	● Ne laissez ni la peau ni des vêtements mouillés entrer en contact avec des pièces sous tension. ● Isolez-vous du travail et de la terre.	● Gardez à l'écart de tout matériel inflammable.	● Protégez vos yeux, vos oreilles et votre corps.
German **WARNUNG**	● Berühren Sie keine stromführenden Teile oder Elektroden mit Ihrem Körper oder feuchter Kleidung! ● Isolieren Sie sich von den Elektroden und dem Erdboden!	● Entfernen Sie brennbarres Material!	● Tragen Sie Augen-, Ohren- und Körperschutz!
Portuguese **ATENÇÃO**	● Não toque partes elétricas e electrodos com a pele ou roupa molhada. ● Isole-se da peça e terra.	● Mantenha inflamáveis bem guardados.	● Use proteção para a vista, ouvido e corpo.
Japanese **注意事項**	● 通電中の電気部品、又は溶材にヒフやぬれた布で触れないこと。 ● 施工物やアースから身体が絶縁されている様にして下さい。	● 燃えやすいものの側での溶接作業は絶対にしてはなりません。	● 目、耳及び身体に保護具をして下さい。
Chinese **警 告**	● 皮肤或湿衣物切勿接触带电部件及焊条。 ● 使你自己與地面和工件絶緣。	● 把一切易燃物品移離工作場所。	● 佩戴眼、耳及身體勞動保護用具。
Korean **위 험**	● 전도체나 용접봉을 젖은 헝겊 또는 피부로 절대 접촉치 마십시요. ● 모재와 접지를 접촉치 마십시요.	● 인화성 물질을 접근 시키지 마시요.	● 눈, 귀와 몸에 보호장구를 착용하십시요.
Arabic **تحذير**	● لا تلمس الاجزاء التي يسري فيها التيار الكهربائي أو الالكترود بجلد الجسم أو بالملابس المبللة بالماء. ● ضع عازلا على جسمك خلال العمل.	● ضع المواد القابلة للاشتعال في مكان بعيد.	● ضع أدوات وملابس واقية على عينيك وأذنيك وجسمك.

READ AND UNDERSTAND THE MANUFACTURER'S INSTRUCTION FOR THIS EQUIPMENT AND THE CONSUMABLES TO BE USED AND FOLLOW YOUR EMPLOYER'S SAFETY PRACTICES.

SE RECOMIENDA LEER Y ENTENDER LAS INSTRUCCIONES DEL FABRICANTE PARA EL USO DE ESTE EQUIPO Y LOS CONSUMIBLES QUE VA A UTILIZAR, SIGA LAS MEDIDAS DE SEGURIDAD DE SU SUPERVISOR.

LISEZ ET COMPRENEZ LES INSTRUCTIONS DU FABRICANT EN CE QUI REGARDE CET EQUIPMENT ET LES PRODUITS A ETRE EMPLOYES ET SUIVEZ LES PROCEDURES DE SECURITE DE VOTRE EMPLOYEUR.

LESEN SIE UND BEFOLGEN SIE DIE BETRIEBSANLEITUNG DER ANLAGE UND DEN ELEKTRODENEINSATZ DES HERSTELLERS. DIE UNFALLVERHÜTUNGSVORSCHRIFTEN DES ARBEITGEBERS SIND EBENFALLS ZU BEACHTEN.

● Keep your head out of fumes. ● Use ventilation or exhaust to remove fumes from breathing zone.	● Turn power off before servicing.	● Do not operate with panel open or guards off.	**WARNING**
● Los humos fuera de la zona de respiración. ● Mantenga la cabeza fuera de los humos. Utilice ventilación o aspiración para gases.	● Desconectar el cable de alimentación de poder de la máquina antes de iniciar cualquier servicio.	● No operar con panel abierto o guardas quitadas.	Spanish **AVISO DE PRECAUCION**
● Gardez la tête à l'écart des fumées. ● Utilisez un ventilateur ou un aspirateur pour ôter les fumées des zones de travail.	● Débranchez le courant avant l'entretien.	● N'opérez pas avec les panneaux ouverts ou avec les dispositifs de protection enlevés.	French **ATTENTION**
● Vermeiden Sie das Einatmen von Schweibrauch! ● Sorgen Sie für gute Be- und Entlüftung des Arbeitsplatzes!	● Strom vor Wartungsarbeiten abschalten! (Netzstrom völlig öffnen; Maschine anhalten!)	● Anlage nie ohne Schutzgehäuse oder Immenschutzverkleidung in Betrieb setzen!	German **WARNUNG**
● Mantenha seu rosto da fumaça. ● Use ventilação e exhaustão para remover fumo da zona respiratória.	● Não opere com as tampas removidas. ● Desligue a corrente antes de fazer serviço. ● Não toque as partes elétricas nuas.	● Mantenha-se afastado das partes moventes. ● Não opere com os painéis abertos ou guardas removidas.	Portuguese **ATENÇÃO**
● ヒュームから頭を離すようにして下さい。 ● 換気や排煙に十分留意して下さい。	● メンテナンス・サービスに取りかかる際には、まず電源スイッチを必ず切って下さい。	● パネルやカバーを取り外したままで機械操作をしないで下さい。	Japanese **注意事項**
●頭部遠離煙霧。 ●在呼吸區使用通風或排風器除煙。	● 維修前切斷電源。	●當表板打開或沒有安全罩時不準作業。	Chinese **警 告**
● 얼굴로부터 용접가스를 멀리하십시요. ● 호흡지역으로부터 용접가스를 제거하기 위해 가스제거기나 통풍기를 사용하십시요.	● 보수전에 전원을 차단하십시요.	● 판넬이 열린 상태로 작동치 마십시요.	Korean **위 험**
● ابعد رأسك بعيداً عن الدخان. ● استعمل التهوية أو جهاز ضغط الدخان للخارج لكي تبعد الدخان عن المنطقة التي تتنفس فيها.	● اقطع التيار الكهربائي قبل القيام بأية صيانة.	● لا تشغل هذا الجهاز اذا كانت الاغطية الحديدية الواقية ليست عليه.	Arabic **تحذير**

LEIA E COMPREENDA AS INSTRUÇÕES DO FABRICANTE PARA ESTE EQUIPAMENTO E AS PARTES DE USO, E SIGA AS PRÁTICAS DE SEGURANÇA DO EMPREGADOR.

使う機械や溶材のメーカーの指示書をよく読み、まず理解して下さい。そして貴社の安全規定に従って下さい。

請詳細閱讀並理解製造廠提供的説明以及應該使用的銀捍材料，並請遵守貴方的有關勞動保護規定。

이 제품에 동봉된 작업지침서를 숙지하시고 귀사의 작업자 안전수칙을 준수하시기 바랍니다.

اقرأ بتمعن وافهم تعليمات المصنع المنتج لهذه المعدات والمواد قبل استعمالها واتبع تعليمات الوقاية لصاحب العمل.

LIMITED WARRANTY

Effective April 1, 1998

This warranty supersedes all previous MK Products warranties and is exclusive, with no other guarantees or warranties expressed or implied.

LIMITED WARRANTY - MK Products, Inc., Irvine, California warrants that all new and unused equipment furnished by MK Products is free from defect in workmanship and material as of the time and place of delivery by MK Products. No warranty is made by MK Products with respect to trade accessories or other items manufactured by others. Such trade accessories and other items are sold subject to the warranties of their respective manufacturers, if any.

MK Products' warranty does not apply to components having normal useful life of less than one (1) year, such as relay points, wire conduit, tungsten, and welding torch parts that come in contact with the welding wire, including nozzles, nozzle insulators, and contact tips where failure does not result from defect in workmanship or material.

In the case of MK Products' breach of warranty or any other duty with respect to the quality of any goods, the exclusive remedies therefore shall be at MK Products' option: **(1)** repair; **(2)** replacement; **(3)** where authorized in writing by MK Products, the reasonable cost of repair or replacement at our Irvine, California plant; or **(4)** payment of or credit for the purchase price (less reasonable depreciation based upon actual use) upon return of the goods at customer's risk and expense. Upon receipt of notice of apparent defect or failure, MK Products shall instruct the claimant on the warranty claim procedures to be followed.

As a matter of general policy only, MK Products may honor an original user's warranty claims on warranted equipment in the event of failure resulting from a defect within the following periods from the date of delivery of equipment to the original user:

1. **Torches and Weldheads** ..... **1 year**
2. **All Other Equipment** ..... **3 years**
3. **Repairs** ..... **90 days**

Classification of any item into the foregoing categories shall be at the sole discretion of MK Products. Notification of any failure must be made in writing within 30 days of such failure.

A copy of the invoice showing the date of sale must accompany products returned for warranty repair or replacement.

All equipment returned to MK Products for service must be properly packaged to guard against damage from shipping. MK Products will not be responsible for any damages resulting from shipping.

Normal surface transportation charges (both ways) for products returned for warranty repair or replacement will be borne by MK Products, except for products sold to foreign markets.

ANY EXPRESS WARRANTY NOT PROVIDED HEREIN AND ANY IMPLIED WARRANTY, GUARANTY, OR REPRESENTATION AS TO PERFORMANCE, AND ANY REMEDY FOR BREACH OF CONTRACT WHICH, BUT FOR THIS PROVISION, MIGHT ARISE BY IMPLICATION, OPERATION OF LAW, CUSTOM OF TRADE, OR COURSE OF DEALING, INCLUDING ANY IMPLIED WARRANTY OF MERCHANTABILITY OR OF FITNESS FOR PARTICULAR PURPOSE, WITH RESPECT TO ANY AND ALL EQUIPMENT FURNISHED BY MK PRODUCTS, IS EXCLUDED AND DISCLAIMED BY MK PRODUCTS.

EXCEPT AS EXPRESSLY PROVIDED BY MK PRODUCTS IN WRITING, MK PRODUCTS ARE INTENDED FOR ULTIMATE PURCHASE BY COMMERCIAL/INDUSTRIAL USERS AND FOR OPERATION BY PERSONS TRAINED AND EXPERIENCED IN THE USE AND MAINTENANCE OF WELDING EQUIPMENT AND NOT FOR CONSUMERS OR CONSUMER USE. MK PRODUCTS WARRANTIES DO NOT EXTEND TO, AND NO RE-SELLER IS AUTHORIZED TO EXTEND MK PRODUCTS' WARRANTIES TO ANY CONSUMER.

MK Products, Inc.
16882 Armstrong Ave.
Irvine, CA 92606
Tel (949)863-1234
Fax (949)474-1428

FORM: LW-8
DATE : April 1, 1998